BANER TOOLS

Professional Cutting Tools

CATALOGUE 2020

Section:

A - Traditional Machines Processing

Pag. 5

Rebating, Beveling, Generic

Battute, Smussi, Generiche

Fälzen, Anfasen, Generisch

pag. 25

Grooving

Incastri

Nuten

Pag. 37

Planing

Piallare

Hobeln

pag. 53

Rounding, Profiling and Edge Banding

Ragnatura, Profilatura, Bordatura

Abrunden, Profileren, Kantenbearbeitung

Pag. 67

Gluing and Finger Jointing

Giunzioni e Finger Joint

Verleimfräser und Keilzinken

pag. 77

Tongue and Grooving

Parchetti e Perline

Nut-und Feder

Pag. 83

Door Machining, Panel Raising

Lavorazioni Porte e Piattabande

Türenbearbeitung, Abplatten

pag. 97

Kitchen Cabinets

Antine

Küchenschränke

Pag. 111

Brazed Tools

Frese Saldobrasate

Gelöteter Messerkopf

Section A

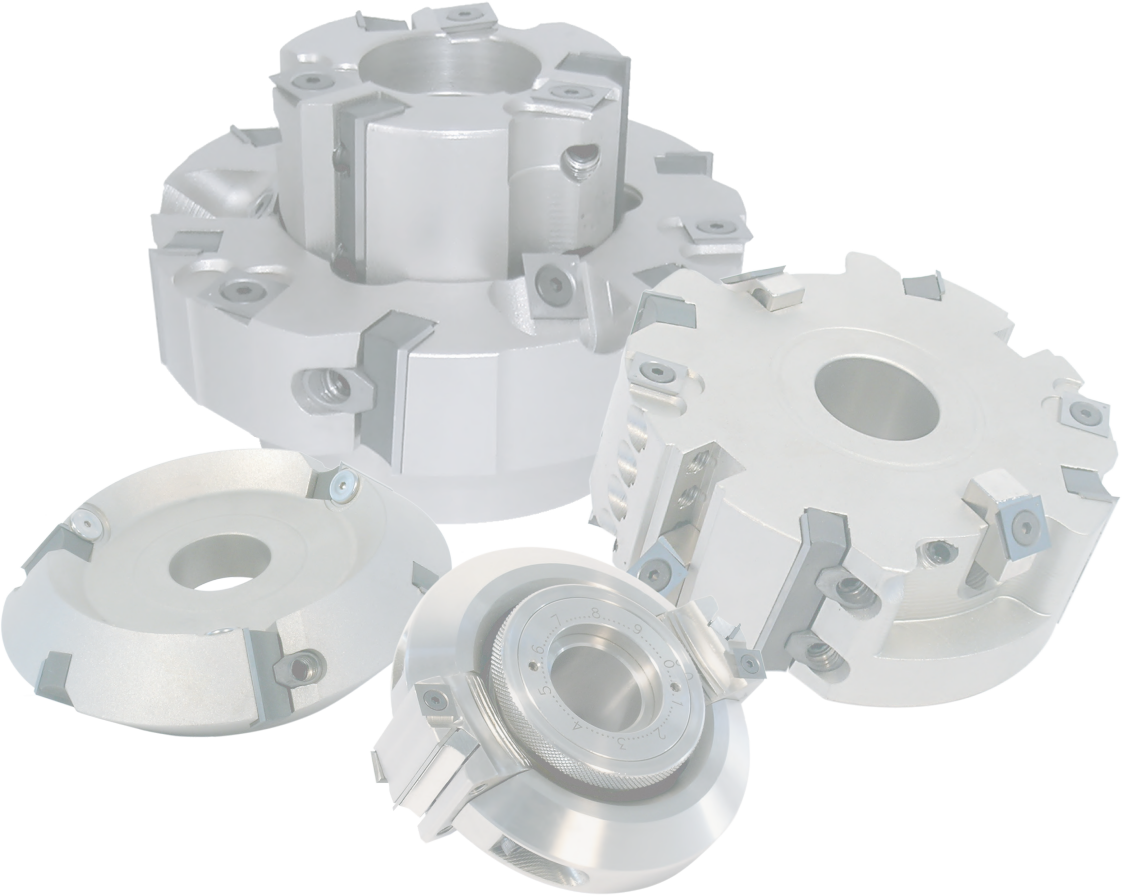

A 1

Rebating, Bevelling, Generic
Battute, Smussi, Generiche
Fälzen, Anfasen, Generisch

A001 pag. 6

- Rebating cutter-head
- Fresa per battute
- Falzfräser

A002 pag. 7

- Rebating cutter-head with adjustable inserts
- Fresa per battute con inserti regolabili
- Falzfräser mit verstellbaren Einsätze

A003 pag. 8

- Variangle cutter-head
- Fresa orientabile
- Schwenk-Messerköpfe

A004 pag. 9

- Set of adjustable cutter-heads for edges
- Frese regolabili per contornare
- Fräsersatz verstellbaren für Kanten

A005 pag. 10

- Cutter-head with edge breakers
- Fresa con inserti leva spigoli
- Fräskörper mit Kantenbrecher

A006 pag. 11

- 45° Bevel cutter-head
- Fresa a smussare 45°
- Fasfräser 45°

A007 pag. 12

- Double angle milling cutter-head
- Fresa prismatica
- Prismenfräser

A008 pag. 13

- 45° Cutter-head
- Fresa a 45°
- Fräskörper 45°

A009 pag. 14

- Rebating cutter-head with 45° adjustable shims
- Fresa per battute con rasanti regolabili a 45°
- Falzfräser mit verstell-baren Vorschneider 45°

A010 pag. 15

- Set of aluminium copying rings with ball bearings
- Set di anelli copiatori in alluminio con cuscinetti
- Satz Kopierringe aus Aluminium mit Kugellagern

A011 pag. 16

- Sanding drum for Spindle Machine
- Rullo carteggiatore per Toupie
- Schleifwalze für Spindel-fräsmaschinen

A012 pag. 17

- Cutter-head for grinding (outiside windows)
- Fresa per smerigliare
- Messerkopf zum Schleifen

A013 pag. 18

- Cutter-head holder for copying lathes - steel body
- Testa portabicchierini per tornio copiativo corpo acciaio
- Fräserhalter für Kopierdrehmaschinen - Stahlkörper

A014 pag. 19

- Short boring chuck for spindle shaft (Collet - Hook wrench)
- Mandrino per foratura per albero toupie (Pinza - Chiave a gancio)
- Kurzbohrfutter für schaft der spindel (Spannzan-gen-Hakenschlüssel)

A015 pag. 20

- Cutter-head for rebates and contours
- Testa per battute e contorni
- Fräskörper zum Fälzen und Konturen

A016 pag. 21

- Cutter-head for profiled contours
- Fresa per contorni sagomati
- Fräskörper für Profil Konturen

A017 pag. 22

- Adjustable cutter-head for rounded tenoning
- Testa regolabile per tenonature stondate
- Fräskörper Einstellbar für Abrunden Zapfen

A018 pag. 23

- Serrated cutter-head Z2 / Z4
- Fresa per coltelli zigrati Z2 / Z4
- Messerköpfe Rücken-verzahnung Z2 / Z4

A019 pag. 24

- Serrated cutter-head Z2+2
- Fresa per coltelli zigrati Z2+2
- Messerköpfe Rückenverzahnung Z2+2

Rebating cutter-head

Fresa per battute

Falzfräser

A001

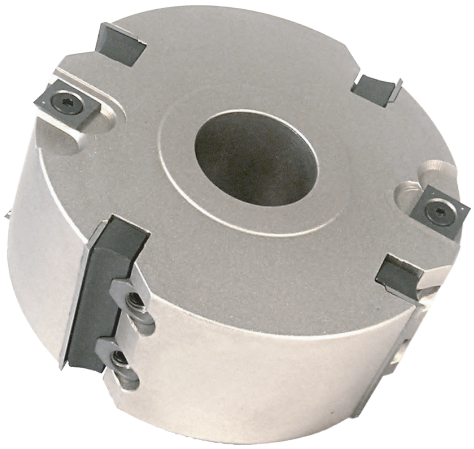

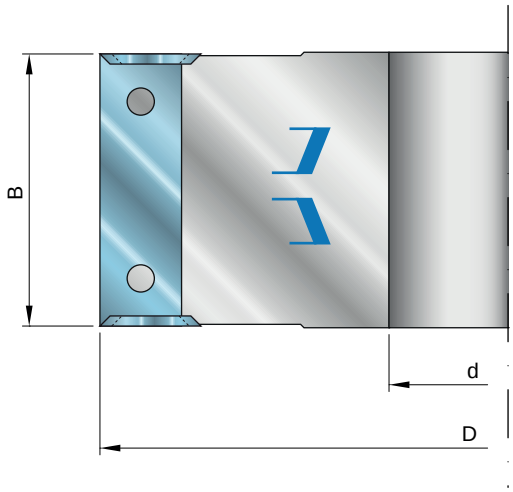

Tool tested according to the norm **EN 847-1**

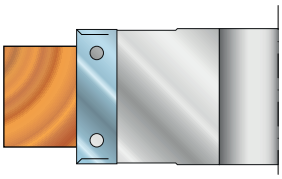

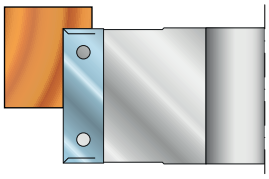

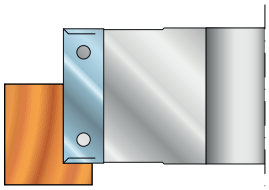

Code	D (mm)	B (mm)	d* (mm)	Z	V	€
A001 001	125	30	30 (40)	4	4	
A001 002	125	50	30 (40)	4	4	
A001 003	140	30	30 (50)	4	4	
A001 004	140	50	30 (50)	4	4	

**The maximum bore size is shown between the brackets.*

Code	Spare parts		€
J009 002	screw	M5X7	
I007 002	spur	14X14X2	
J003 001	screw	M8-M6	
J005 001	nut	M8	
J007 002	wedge	29mm	
J007 005	wedge	49mm	
I003 002	knife	30X12X1.5	
I003 004	knife	50X12X1.5	

Machine	**Macchina**	**Maschine**
Application	**Applicazioni**	**Einsatzbereich**
Advantages	**Vantaggi**	**Vorteile**

Rebating cutter-head with adjustable Inserts

Fresa per battute con inserti regolabili

Falzfräser mit verstellbaren Einsätze

A002

Tool tested according to the norm EN 847-1

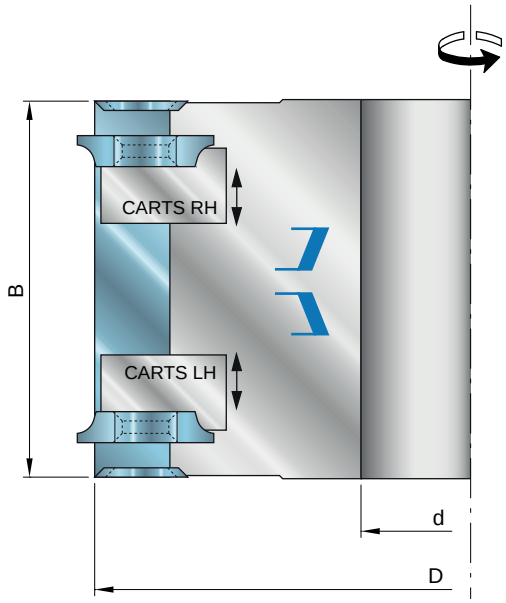

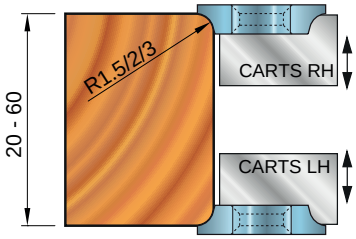

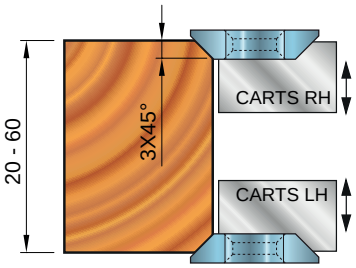

Code	D (mm)	B (mm)	d* (mm)	Z	V	LS	€
A002 001	130	60	30 (50)	4	4	4	

**Indicate the insert type : I015 001 - I014 001*
**The maximum bore size is shown between the brackets.*

Code	Spare parts		€
J009 002	screw	M5X7	
I007 002	spur	14X14X2	
J014 001	screw	M6-M14	
I015 001	radius insert	R1.5-R2-R3	
I014 001	bevellingins	45°	
J001 001	screw	M5X10	
J015 001	mobile support RH		
J015 002	mobile support LH		
J003 001	screw	M8-M6	
J005 001	nut	M8	
J007 006	wedge	59mm	
I003 005	knife	60X12X1.5	

Machine	Macchina	Maschine
Application	Applicazioni	Einsatzbereich
Advantages	Vantaggi	Vorteile

BANER TOOLS

Variangle cutter-head

Fresa orientabile

Schwenk-Messerköpfe

A003

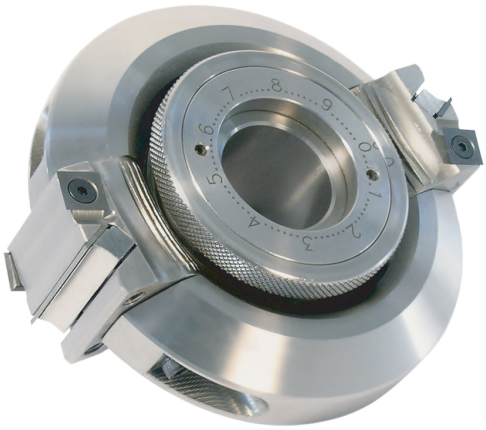

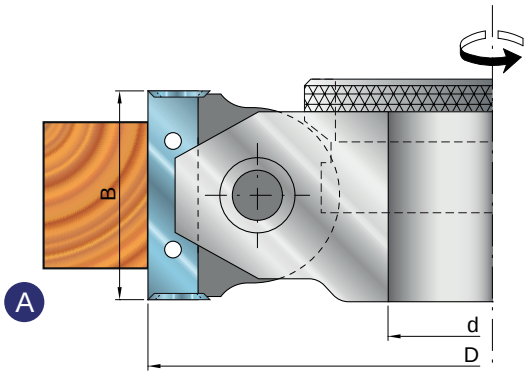

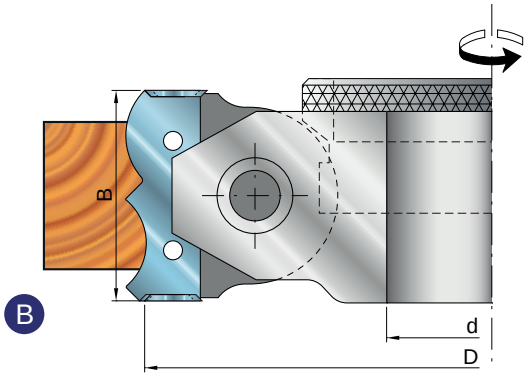

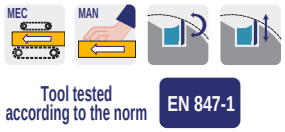

Tool tested according to the norm EN 847-1

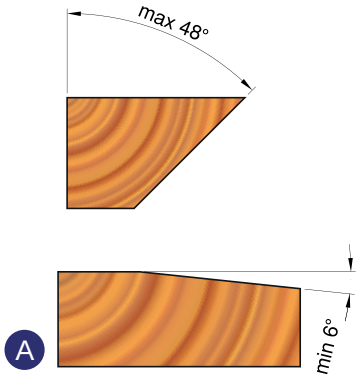

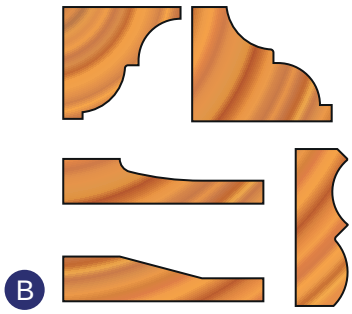

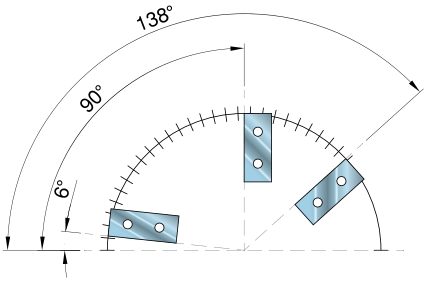

Code	D (mm)	B (mm)	d* (mm)	Z	V	Ref.	€
A003 001	165	50	30 (50)	2	4	A	
A003 002	165	50	30 (50)	2	4	B	

**The maximum bore size is shown between the brackets.*

Code	Spare parts		€
J009 002	screw	M5X7	
I007 002	spur	14X14X2	
J001 004	screw	M8X12	
J007 011	wedge	49mm	
I003 004	knife	profile A 50X12X1.5	
I018 001	knife	profile B	
I018 002	knife	profile C	
I018 003	knife	profile D	

Machine	Macchina	Maschine
Application	Applicazioni	Einsatzbereich
Advantages	Vantaggi	Vorteile

Set of adjustable cutter-heads for edges

Frese regolabili per contornare

Fräsersatz verstellbaren für Kanten

A004

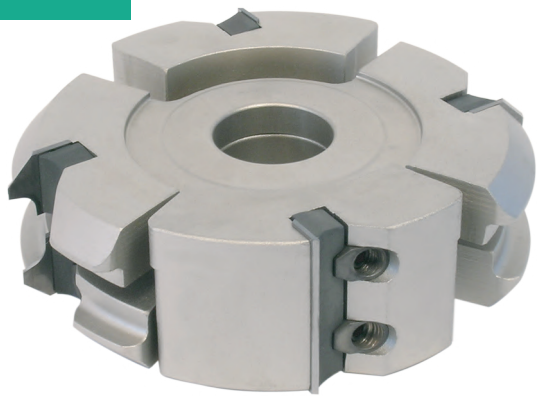

Tool tested according to the norm EN 847-1

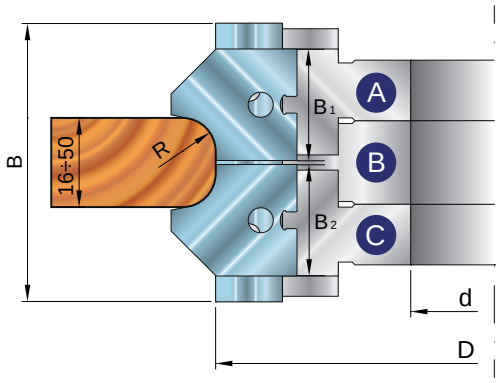

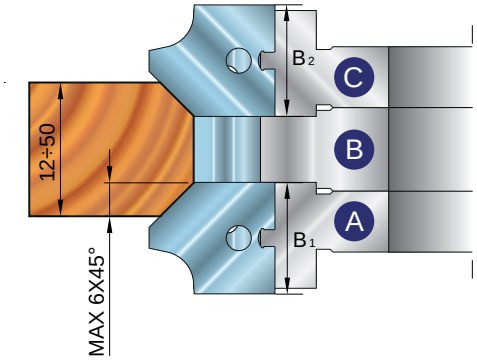

Code	D (mm)	B (mm)	d* (mm)	Z	R	Ref.	€
A004 001	100	30	30 (35)	2		B	
A004 002	100	50	30 (35)	2		B	
A004 003	140	30	30 (40)	2		B	
A004 004	140	50	30 (40)	2		B	
A004 005	116	20	30 (35)	2	2÷8	A	
A004 006	116	20	30 (35)	2	2÷8	C	
A004 007	154	20	30 (40)	2	2÷8	A	
A004 008	154	20	30 (40)	2	2÷8	C	

Code	Spare parts			Rif.	€
J003 001	screw	M8-M6		A-B-C	
J005 001	nut	M8		A-B-C	
J006 002	wedge	19mm		A-C	
J007 002	wedge	29mm		B	
J007 005	wedge	49mm		B	
I003 002	knife	30X12X1.5		B	
I003 004	knife	50X12X1.5		B	

When placing the order indicat the code of the knives to fit.

**The maximum bore size is shown between the brackets.*

Code	Knife	R	€
I019 001		2	
I019 002		3	
I019 003		4	
I019 004		5	
I019 005		6	
I019 006		7	
I019 007		8	

Code	Knife	R	€
I019 008		2	
I019 009		3	
I019 010		4	
I019 011		5	
I019 012		6	
I019 013		7	
I019 014		8	

Machine	Macchina	Maschine
Application	Applicazioni	Einsatzbereich
Advantages	Vantaggi	Vorteile

BANER TOOLS

Cutter-head with edge breakers

Fresa con inserti leva spigoli

Fräskörper mit Kantenbrecher

A005

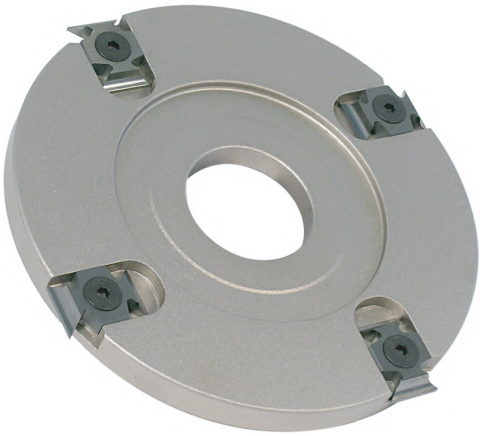

MEC MAN

Tool tested according to the norm EN 847-1

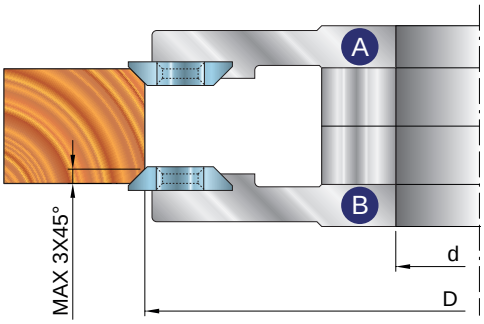

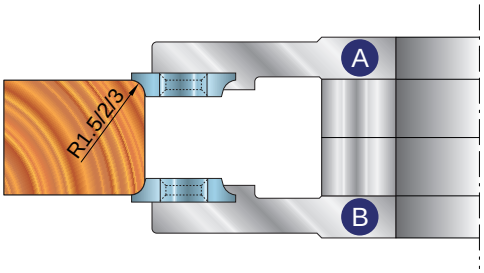

Code	D (mm)	B (mm)	d* (mm)	LS	Ref.	€
A005 001	130	20	30 (50)	2	B	
A005 002	130	20	30 (50)	2	A	
A005 003	180	20	30 (50)	2	B	
A005 004	180	20	30 (50)	2	A	
A005 005	210	20	30 (50)	2	B	
A005 006	210	20	30 (50)	2	A	
A005 007	250	20	30 (50)	2	B	
A005 008	250	20	30 (50)	2	A	
A005 009	300	20	30 (50)	2	B	
A005 010	300	20	30 (50)	2	A	
A005 011	130	20	30 (50)	3	B	
A005 012	130	20	30 (50)	3	A	
A005 013	180	20	30 (50)	3	B	
A005 014	180	20	30 (50)	3	A	
A005 015	210	20	30 (50)	3	B	
A005 016	210	20	30 (50)	3	A	
A005 017	250	20	30 (50)	3	B	
A005 018	250	20	30 (50)	3	A	
A005 019	300	20	30 (50)	3	B	
A005 020	300	20	30 (50)	3	A	
A005 021	130	20	30 (50)	4	B	
A005 022	130	20	30 (50)	4	A	
A005 023	180	20	30 (50)	4	B	
A005 024	180	20	30 (50)	4	A	
A005 025	210	20	30 (50)	4	B	
A005 026	210	20	30 (50)	4	A	
A005 027	250	20	30 (50)	4	B	
A005 028	250	20	30 (50)	4	A	
A005 029	300	20	30 (50)	4	B	
A005 030	300	20	30 (50)	4	A	

**Indicate the insert type : I015 001 - I014 001*

**The maximum bore size is shown between the brackets.*

Code	Spare parts			€
J009 004	screw	M5X10		
I015 001	radius insert	R1.5-R2-R3		
I014 001	bevellingins.	45°		

Machine	Macchina	Maschine
Application	Applicazioni	Einsatzbereich
Advantages	Vantaggi	Vorteile

45° Bevel cutter-head

Fresa a smussare 45°

Fasfräser 45°

A006

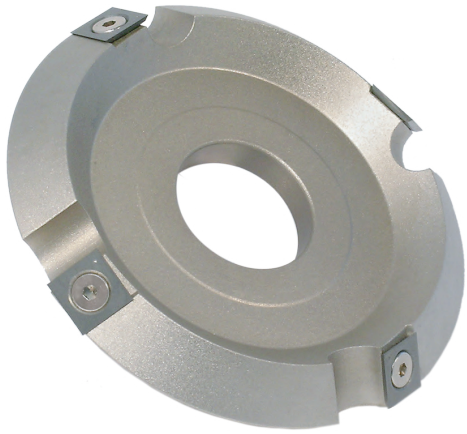

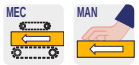

Tool tested according to the norm EN 847-1

Code	D (mm)	d* (mm)	V	Ref.	€
A006 001	120	30 (50)	2	B	
A006 002	120	30 (50)	2	A	
A006 003	150	30 (50)	2	B	
A006 004	150	30 (50)	2	A	
A006 005	200	30 (50)	2	B	
A006 006	200	30 (50)	2	A	
A006 007	250	30 (50)	2	B	
A006 008	250	30 (50)	2	A	
A006 009	120	30 (50)	3	B	
A006 010	120	30 (50)	3	A	
A006 011	150	30 (50)	3	B	
A006 012	150	30 (50)	3	A	
A006 013	200	30 (50)	3	B	
A006 014	200	30 (50)	3	A	
A006 015	250	30 (50)	3	B	
A006 016	250	30 (50)	3	A	
A006 017	120	30 (50)	4	B	
A006 018	120	30 (50)	4	A	
A006 019	150	30 (50)	4	B	
A006 020	150	30 (50)	4	A	
A006 021	200	30 (50)	4	B	
A006 022	200	30 (50)	4	A	
A006 023	250	30 (50)	4	B	
A006 024	250	30 (50)	4	A	

**The maximum bore size is shown between the brackets.*

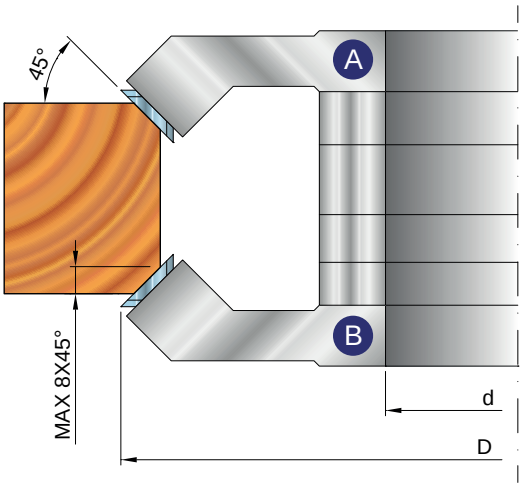

Code	Spare parts		€
J009 002	screw	M5X7	
I007 002	spur	14X14X2	

Machine	Macchina	Maschine
Application	Applicazioni	Einsatzbereich
Advantages	Vantaggi	Vorteile

BANER TOOLS

Double angle milling cutter-head

Fresa prismatica

Prismenfräser

A007

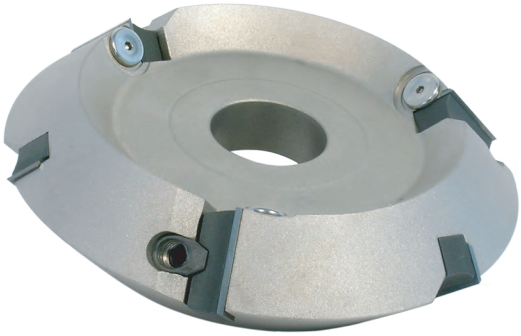

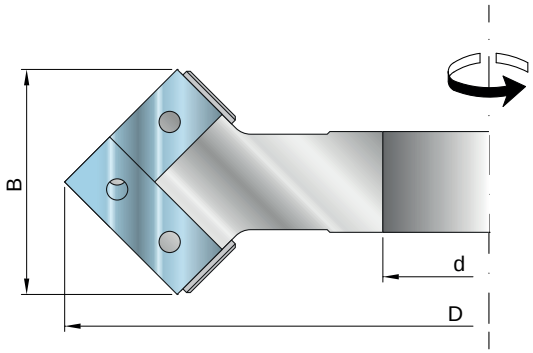

Tool tested according to the norm EN 847-1

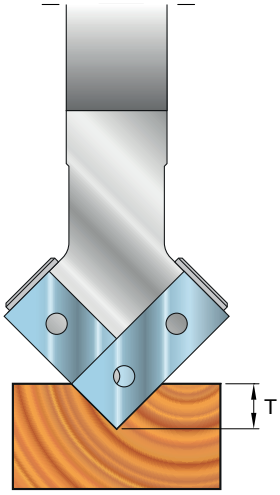

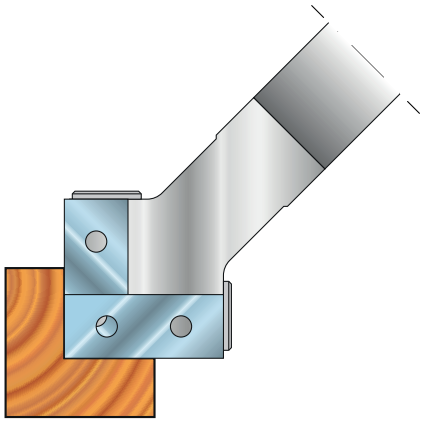

Code	D (mm)	B (mm)	d* (mm)	Z	T	€
A007 001	160	40	30 (40)	3+3	20	
A007 002	180	40	30 (50)	3+3	20	
A007 003	200	40	30 (50)	3+3	20	
A007 004	160	70	30 (40)	3+3	35	
A007 005	180	70	30 (50)	3+3	35	
A007 006	200	70	30 (50)	3+3	35	

**The maximum bore size is shown between the brackets.*

Code	Spare parts			€
J003 001	screw	M8XM6		
J005 001	nut	M8		
J010 001	screw	M5X5		
J007 002	wedge	29mm		
J007 005	wedge	49mm		
I003 002	knife	30X12X1.5		
I003 004	knife	50X12X1.5		

Machine	Macchina	Maschine
Application	Applicazioni	Einsatzbereich
Advantages	Vantaggi	Vorteile

45° Cutter-head

Fresa a 45°

Fräskörper 45°

A008

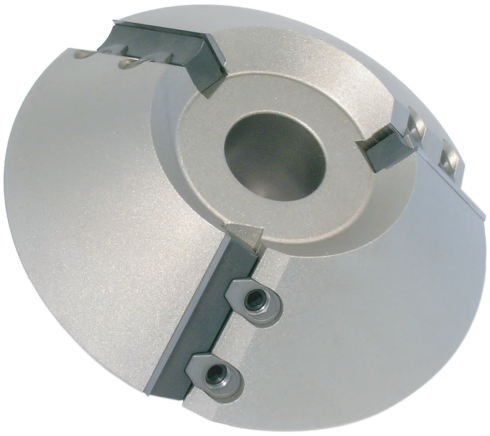

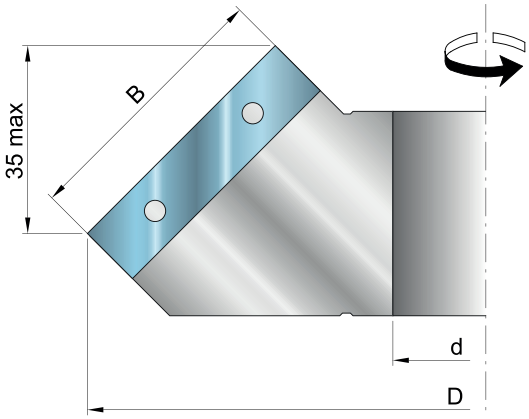

Tool tested according to the norm EN 847-1

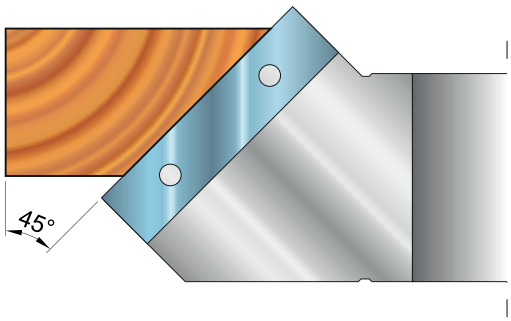

Calculation of the effective B for inclined cutters:
max = B x sin α (ex. 50 x sin45° = 35.35mm)

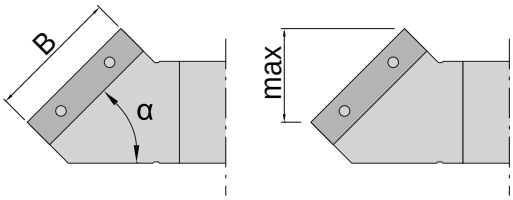

Code	D (mm)	B (mm)	d* (mm)	Z	€
A008 001	150	50	30 (40)	3	

The maximum bore size is shown between the brackets.

Code	Spare parts		€
J003 001	screw	M8-M6	
J005 001	nut	M8	
J007 005	wedge	49mm	
I003 004	knife	50X12X1.5	

Machine	Macchina	Maschine
Application	Applicazioni	Einsatzbereich
Advantages	Vantaggi	Vorteile

BANER TOOLS

Rebating cutter with 45° adjustable shims

Fresa per battute con rasanti regolabili a 45°

Falzfräser mit verstellbaren Vorschneider 45°

A009

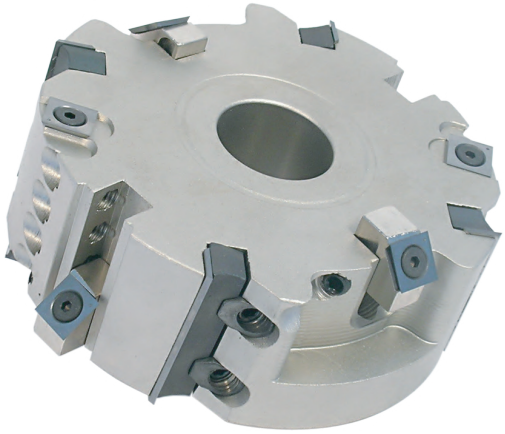

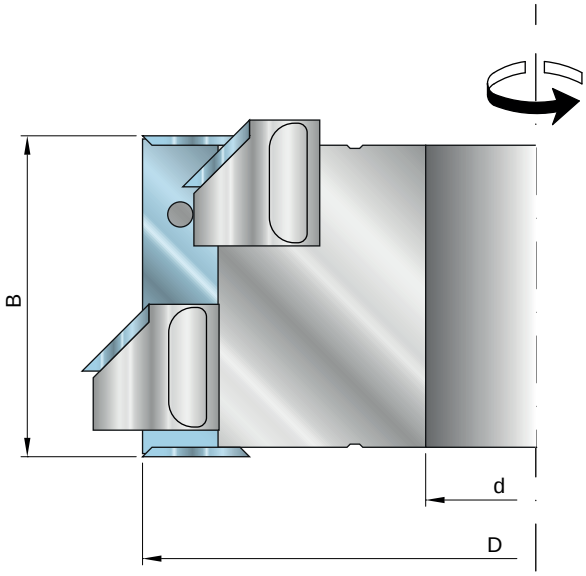

MEC MAN

Tool tested according to the norm EN 847-1

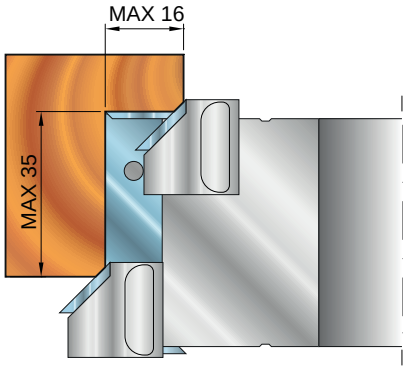

Code	D (mm)	B (mm)	d* (mm)	Z	V	V45°	€
A009 001	125	50	30 (40)	4	4	4	
A009 002	140	50	30 (40)	4	4	4	
A009 003	180	50	30 (50)	4	4	4	

**The maximum bore size is shown between the brackets.*

Code	Spare parts		€
J009 002	screw	M5X7	
I007 002	spur	14X14X2	
J001 004	screw	M8X12	
J016 001	mobile support RH		
J003 001	screw	M8-M6	
J005 001	nut	M8	
J007 005	wedge	49mm	
I003 004	knife	50X12X1.5	

Machine	Macchina	Maschine
Application	Applicazioni	Einsatzbereich
Advantages	Vantaggi	Vorteile

Set of aluminium copying rings with ball bearings

Set di anelli copiatori in alluminio con cuscinetti

Satz Kopierringe aus Aluminium mit Kugellagern

A010

Tool tested according to the norm EN 847-1

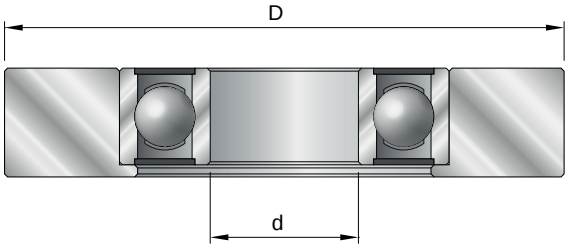

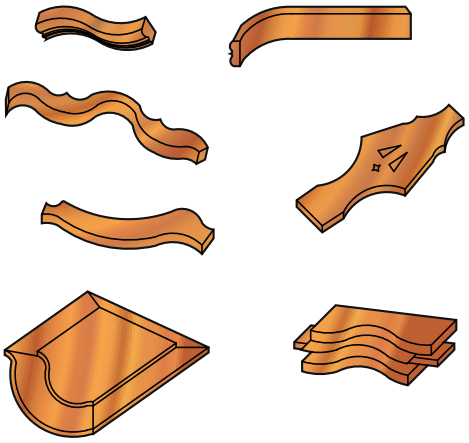

Code	D (mm)	d (mm)	€
A010 001	90/95/100/105/110/115/120/125/130	30	
A010 002	90/95/100/105/110/115/120/125/130	35	
A010 003	90/95/100/105/110/115/120/125/130	40	
A010 004	95/100/105/110/115/120/125/130/135	50	

Machine	Macchina	Maschine
Application	Applicazioni	Einsatzbereich
Advantages	Vantaggi	Vorteile

BANER TOOLS

Sanding drum for Spindle Machine

Rullo carteggiatore per Toupie

Schleifwalze für Spindelfräsmaschinen

A011

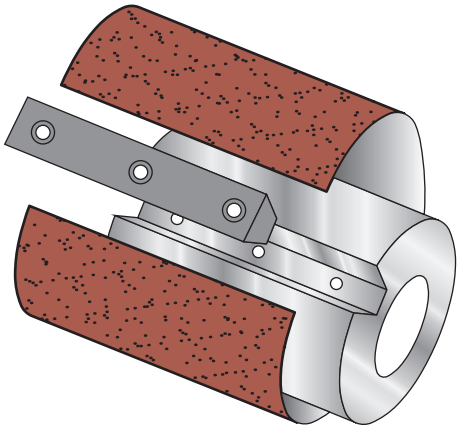

MEC MAN

Tool tested according to the norm EN 847-1

Code	D (mm)	B (mm)	d* (mm)	€
A011 001	80	120	6	
A011 002	100	120	8	

**The maximum bore size is shown between the brackets.*

Code	Spare parts		€
J010 002	screw	M5X12 TCEI	
J011 009	wedge	120X15X8	

Machine	Macchina	Maschine
Application	Applicazioni	Einsatzbereich
Advantages	Vantaggi	Vorteile

Cutterhead for grinding (outiside windows)

Testa per smerigliare

Messerkopf zum Schleifen

A012

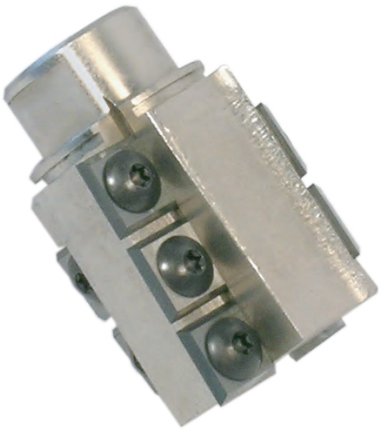

Tool tested according to the norm EN 847-1

Code	D (mm)	B (mm)	S (mm)	Z	€
A012 001	40	40	M14	4	

Code	Spare parts		€
J013 001	screw	M4X6 TORX	
I003 004	knife	50X12X1.5	

Machine	Macchina	Maschine
Application	Applicazioni	Einsatzbereich
Advantages	Vantaggi	Vorteile

BANER TOOLS

Cutter-head holder for copying lathes - steel body

Testa portabicchierini per tornio copiativo corpo acciaio

Fräserhalter für Kopierdrehmaschinen - Stahlkörper

A013

Tool tested according to the norm EN 847-1

Code	D (mm)	B (mm)	d* (mm)	Z	lathe	€
A013 001	145	58	29+CH	3	Bacci	
A013 002	140	46	25	4	Bulleri	
A013 003	170	46	25	4	Bulleri	
A013 004	170	46	25+CH	4	Valeri	
A013 005	210	57.5	20	5	Giordanengo	
A013 006	220	40.5	78	5	Bacci	

**Fot ALU body incremet of 10%*

**Indicate rotation when placing the order*

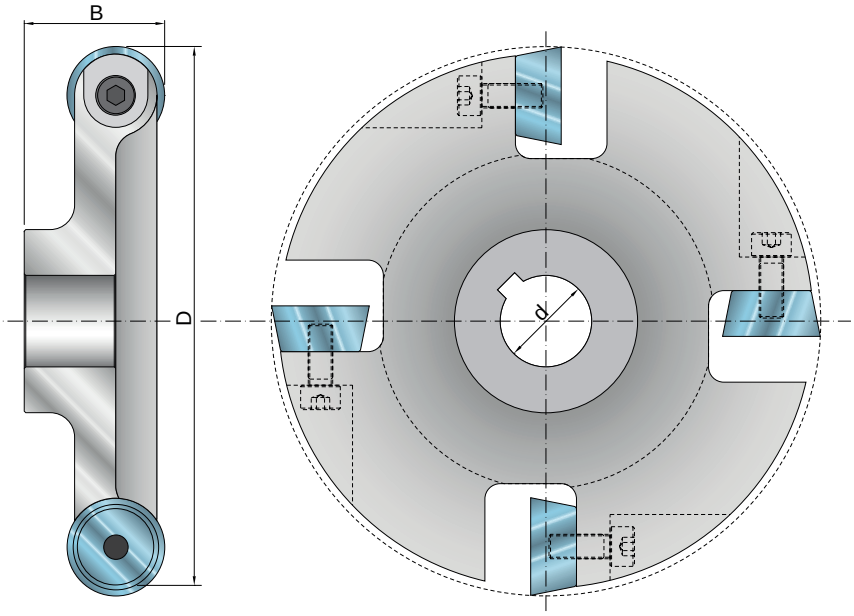

Machine	Macchina	Maschine
Application	Applicazioni	Einsatzbereich
Advantages	Vantaggi	Vorteile

Short boring chuck for spindle shaft (Collet - Hook wrench)

Mandrino per foratura per albero toupie (Pinza - Chiave a gancio)

Kurzbohrfutter für Spindelwelle (Spannzangen - Hakenschlüssel)

A014

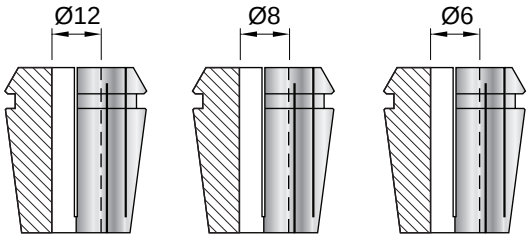

Clamp 1 Clamp 2 Clamp 3

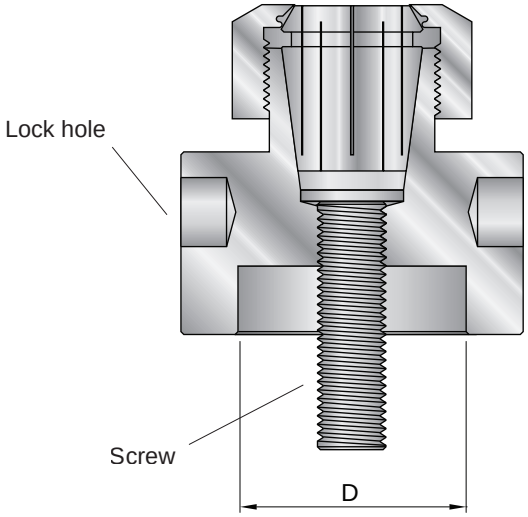

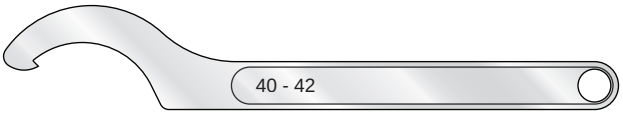

Spanner

Lock pin

Code	D (mm)	€
A014 001	35	
A014 002	40	
A014 003	50	

Code	Spare parts	€
CODE	clamp 1	
CODE	clamp 2	
CODE	clamp 3	
CODE	spanner	
CODE 001	lock pin	

Machine	**Macchina**	**Maschine**
Application	**Applicazioni**	**Einsatzbereich**
Advantages	**Vantaggi**	**Vorteile**

BANER TOOLS

Cutter-head for rebates and contours

Testa per battute e contorni

Fräskörper zum Fälzen und Konturen

A015

Tool tested according to the norm EN 847-1

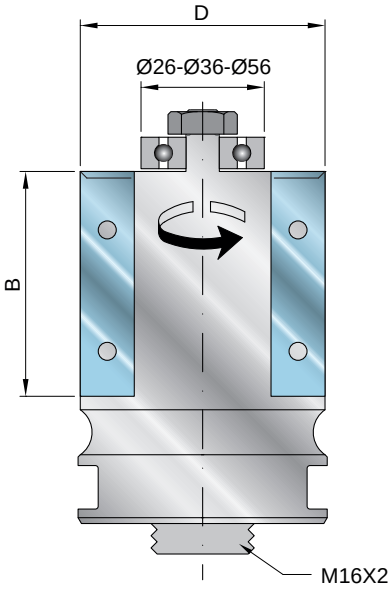

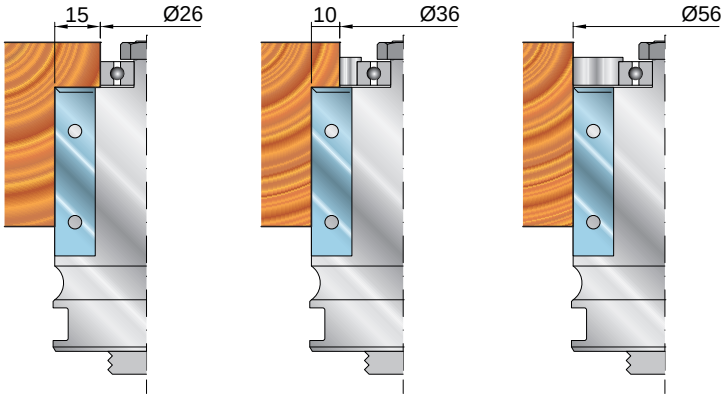

Code	D (mm)	B (mm)	Z	V	€
A015 001	56	30	2	2	
A015 002	56	50	2	2	
A015 003	56	60	2	2	

**Equipped with bearing*

Code	Spare parts			€
J009 002	screw	M5X7		
I007 002	knife	14X14X2		
J001 004	screw	M8X12		
J007 002	wedge	29mm		
J007 005	wedge	49mm		
J007 006	wedge	59mm		
I003 002	knife	30X12X1.5		
I003 004	knife	50X12X1.5		
I003 005	knife	60X12X1.5		

Machine	Macchina	Maschine
Application	Applicazioni	Einsatzbereich
Advantages	Vantaggi	Vorteile

Cutter-head for profiled contours

Fresa per contorni sagomati

Fräskörper für Profil Konturen

A016

Tool tested according to the norm EN 847-1

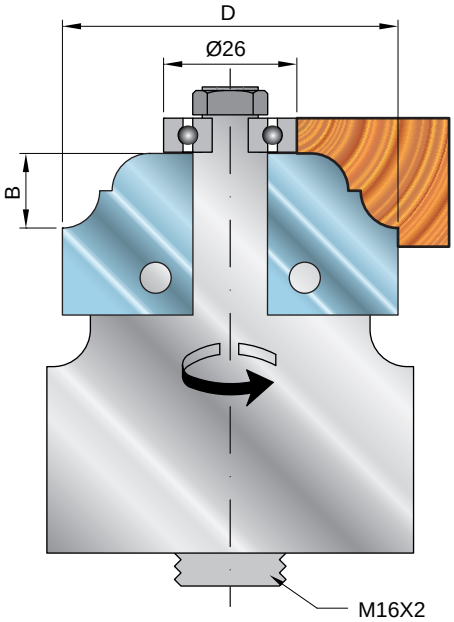

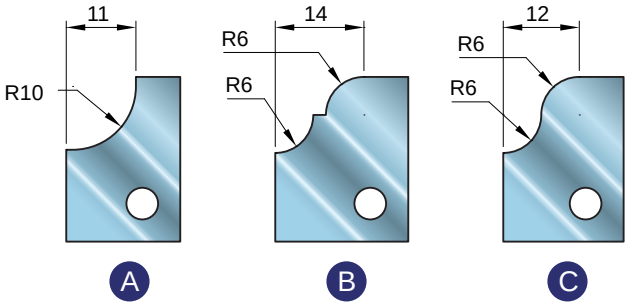

Code	D (mm)	B (mm)	Z	€
A016 001	60	12	2	

Code	Spare parts		€
I020 001	knife	Profile A 20X26X2	
I020 002	knife	Profile B 20X26X2	
I020 003	knife	Profile C 20X26X2	

Machine	Macchina	Maschine
Application	Applicazioni	Einsatzbereich
Advantages	Vantaggi	Vorteile

BANER TOOLS

Adjustable cutter-head for rounded tenoning

Testa regolabile per tenonature stondate

Fräskörper Einstellbar für Abrunden Zapfen

A017

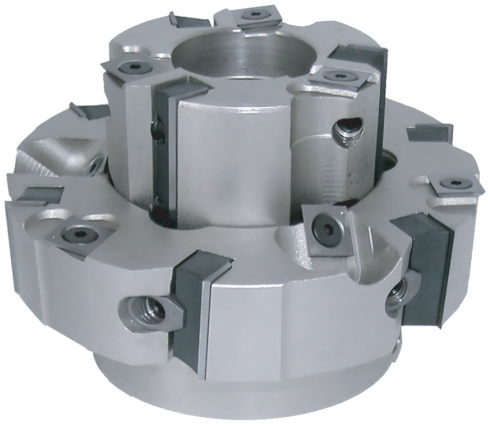

Tool tested according to the norm EN 847-1

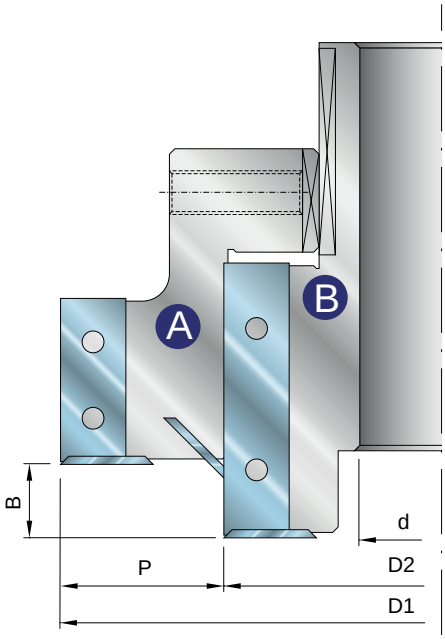

Code	D1 (mm)	D2 (mm)	B (mm)	Z	V	P (mm)	€
A017 001	140	80	13.5÷32	6+3	3+3	30	

Code	Spare parts			Ref.	€
J009 002	screw	M5X7		A-B	
I007 002	spur	14X14X2		A-B	
J003 001	screw	M8-M6		A	
J005 001	nut	M8		A	
J007 002	wedge	29mm		A	
I003 002	knife	30X12X1.5		A	
J001 006	screw	M8X20		B	
J007 005	wedge	49mm		B	
I003 004	knife	50X12X1.5		B	

Machine	Macchina	Maschine
Application	Applicazioni	Einsatzbereich
Advantages	Vantaggi	Vorteile

Serrated cutter-head Z2 / Z4

Fresa per coltelli zigrati Z2 / Z4

Messerköpfe Rückenverzahnung Z2 / Z4

A018

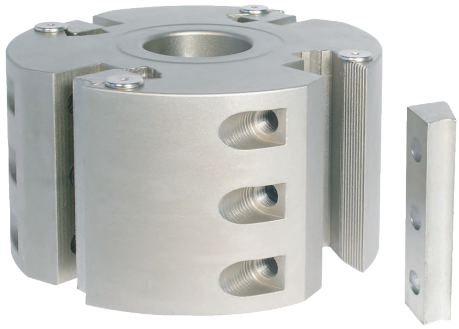

Tool tested according to the norm EN 847-1

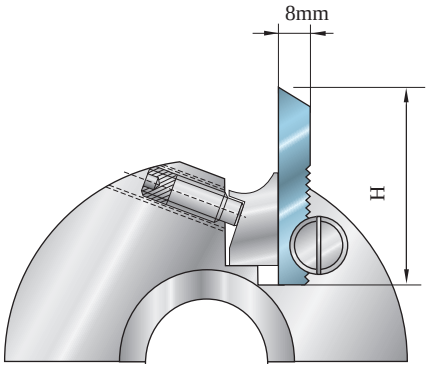

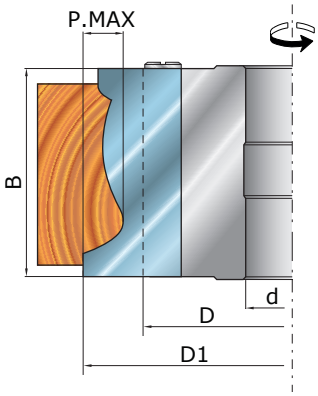

Code	D (mm)	B (mm)	d (mm)	Z	€
A018 001	122	40	30 (40)	2	
A018 002	122	60	30 (40)	2	
A018 003	122	80	30 (40)	2	
A018 004	122	100	30 (40)	2	
A018 005	122	120	30 (40)	2	
A018 006	122	40	30 (40)	4	
A018 007	122	60	30 (40)	4	
A018 008	122	80	30 (40)	4	
A018 009	122	100	30 (40)	4	
A018 010	122	130	30 (40)	4	
A018 011	122	150	30 (40)	4	
A018 012	122	180	30 (40)	4	
A018 013	122	200	30 (40)	4	
A018 014	122	230	30 (40)	4	
A018 015	137	40	30 (50)	4	
A018 016	137	60	30 (50)	4	
A018 017	137	80	30 (50)	4	
A018 018	137	100	30 (50)	4	
A018 019	137	130	30 (50)	4	
A018 020	137	150	30 (50)	4	
A018 021	137	180	30 (50)	4	
A018 022	137	200	30 (50)	4	
A018 023	137	230	30 (50)	4	

**The tool is supplied without knives*

**The maximum bore size is shown between the brackets.*

H (mm)	P.MAX (mm)	D (mm)	D1 (mm)
50	12	122	160
50	12	137	175
60	20	122	180
60	20	137	195
70	30	122	200
70	30	137	215

Serrated Hydro cutter-heads available by quotation

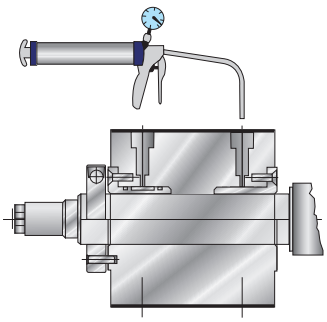

Machine	Macchina	Maschine
Application	Applicazioni	Einsatzbereich
Advantages	Vantaggi	Vorteile

BANER TOOLS

Serrated cutter-head Z2+2

Fresa per coltelli zigrati Z2+2

Messerköpfe Rückenverzahnung Z2+2

A019

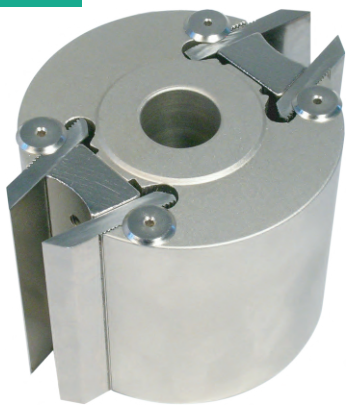

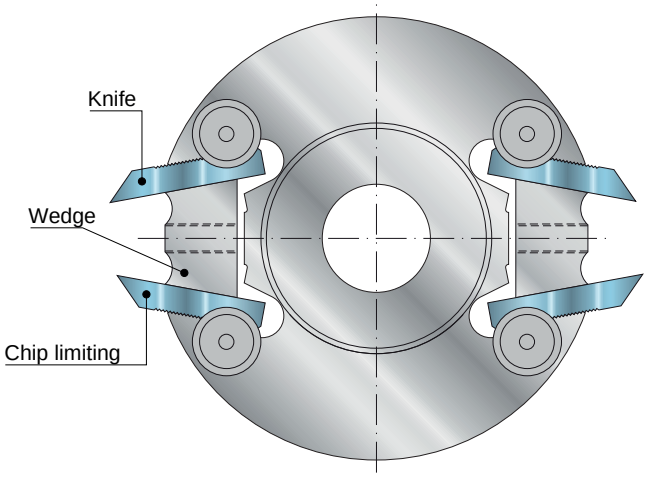

Tool tested according to the norm EN 847-1

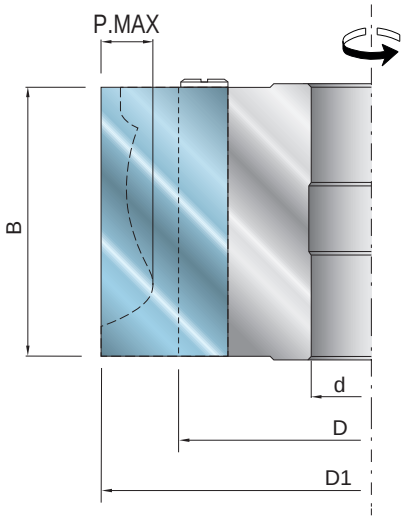

H (mm)	P.MAX (mm)	D (mm)	D1 (mm)
50	12	122	160
50	12	137	175
60	20	122	180
60	20	137	195
70	30	122	200
70	30	137	215

Code	D (mm)	B (mm)	d (mm)	Z	€
A019 001	122	25	30 (40)	2+2	
A019 002	122	30	30 (40)	2+2	
A019 003	122	40	30 (40)	2+2	
A019 004	122	50	30 (40)	2+2	
A019 005	122	55	30 (40)	2+2	
A019 006	122	60	30 (40)	2+2	
A019 007	122	80	30 (40)	2+2	
A019 008	122	100	30 (40)	2+2	
A019 009	122	120	30 (40)	2+2	
A019 010	122	130	30 (40)	2+2	
A019 011	122	150	30 (40)	2+2	
A019 012	122	160	30 (40)	2+2	
A019 013	122	180	30 (40)	2+2	
A019 014	122	25	30 (40)	2+2	
A019 015	137	30	30 (50)	2+2	
A019 016	137	40	30 (50)	2+2	
A019 017	137	50	30 (50)	2+2	
A019 018	137	55	30 (50)	2+2	
A019 019	137	60	30 (50)	2+2	
A019 020	137	80	30 (50)	2+2	
A019 021	137	100	30 (50)	2+2	
A019 022	137	120	30 (50)	2+2	
A019 023	137	130	30 (50)	2+2	
A019 024	137	150	30 (50)	2+2	
A019 025	137	160	30 (50)	2+2	
A019 026	137	180	30 (50)	2+2	

**The tool is supplied without knives*
**The maximum bore size is shown between the brackets.*

Machine	**Macchina**	**Maschine**
Application	**Applicazioni**	**Einsatzbereich**
Advantages	**Vantaggi**	**Vorteile**

A 2

Grooving Incastri Nuten

A020 pag. 26

- Grooving cutter-head 4÷7.5 / 5÷9.5
- Fresa per incastri 4÷7.5 / 5÷9.5
- Nutmesserköpfe verstellbar ÷7.5 / 5÷9.5

A021 pag. 27

- Grooving cutter-head 8÷15.5 / 15÷29.5
- Fresa per incastri 8÷15.5 / 15÷29.5
- Nutmesserköpfe verstellbar 8÷15.5 / 15÷29.5

A022 pag. 28

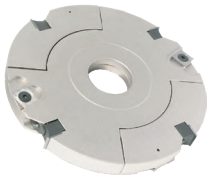

- Adjustable grooving cutter-head 12÷23.5
- Fresa per incastri 12÷23.5
- Nutmesserköpfe verstellbar 12÷23.5

A023 pag. 29

- Grooving cutter-head 20÷39.5 / 30÷59.5 /50÷100
- Fresa per incastri 20÷39.5 / 30÷59.5 / 50÷100
- Nutmesserköpfe verstellbar 20÷39.5 / 30÷59.5 / 50÷100

A024 pag. 30

- Multi-use adjustable cutter-head 30÷59.5 Pro
- Fresa multiuso regolabile 30÷59.5 Pro
- Verstellbarer Mehrzweck-Schneider 30÷59.5 Pro

A025 pag. 32

- Multi-use adjustable cutter-head 30÷59.5 Plus
- Fresa multiuso regolabile 30÷59.5 Plus
- Verstellbarer Mehrzweck-Schneider 30÷59.5 Plus

A026 pag. 34

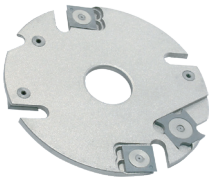

- Grooving cutter-head for Lamello
- Fresa per incastri per Lamello
- Nutmesserköpfe für Lamello

A027 pag. 35

- Hardware lodging cutter-head
- Fresa per alloggio ferramenta
- Nutmesserköpfe zur Aufnahme der Hardware

A028 pag. 36

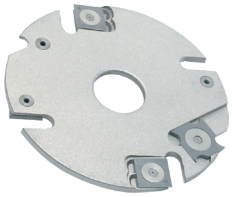

- Grooving cutter-head
- Fresa per incastri
- Nutfräser

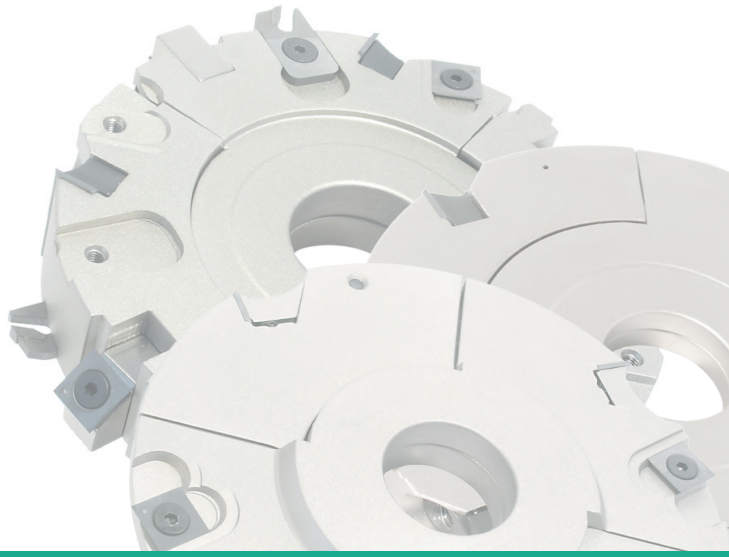

Grooving cutter-head 4÷7.5 / 5÷9.5

Fresa per incastri 4÷7.5 / 5÷9.5

Nutmesserköpfe verstellbar 4÷7.5 / 5÷9.5

A020

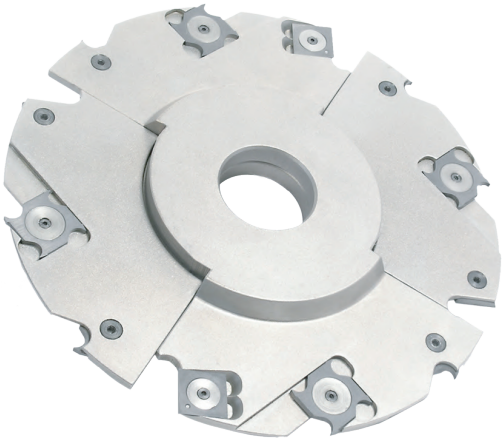

Tool tested according to the norm EN 847-1

Cutter-head with different thickness by quotation.

Code	D (mm)	B (mm)	d* (mm)	Z	V	P	€
A020 001	120	4÷7.5	30 (40)	4	4	20	
A020 002	140	4÷7.5	30 (50)	4	4	25	
A020 003	160	4÷7.5	30 (50)	8	4	35	
A020 004	180	4÷7.5	30 (50)	8	4	35	
A020 005	200	4÷7.5	30 (50)	8	4	45	

Code	D (mm)	B (mm)	d* (mm)	Z	V	P	€
A020 006	120	5÷9.5	30 (40)	4	4	20	
A020 007	140	5÷9.5	30 (50)	4	4	25	
A020 008	160	5÷9.5	30 (50)	8	4	35	
A020 009	180	5÷9.5	30 (50)	8	4	35	
A020 010	200	5÷9.5	30 (50)	8	4	45	

**The maximum bore size is shown between the brackets.*

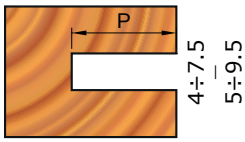

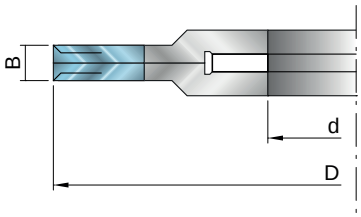

Additional cutter | Elemento aggiuntivo | Mittelteile

Code	Spare parts			Ref.	€
J011 001	screw	M4X1.9		B 4÷7.5	
J012 003	nut	D9.5X1.8		B 4÷7.5	
I007 001	spur	14X14X1,5		B 4÷7.5	
J011 001	screw	M4X1.9		B 4÷7.5	
J012 002	nut	D11.5X1.8		B 4÷7.5	
I009 001	knife	18X18X1.9		B 4÷7.5	
J011 002	screw	M4X3		B 5÷9.5	
J012 003	nut	D9.5X1.8		B 5÷9.5	
J012 001	nut	D11.5X2.5		B 5÷9.5	
I007 002	spur	14X14X2		B 5÷9.5	
I009 002	knife	18X18X2.9		B 5÷9.5	
J008 001	wedge	7.3mm		Additional comp.	
I001 001	knife	7.6X12X1.5		Additional comp.	

Code	D (mm)	B1 (mm)	d* (mm)	Z	€
A020 011	120	7.6	30 (40)	2	
A020 012	140	7.6	30 (50)	2	
A020 013	160	7.6	30 (50)	2	
A020 014	180	7.6	30 (50)	2	
A020 015	200	7.6	30 (50)	2	

**The maximum bore size is shown between the brackets.*

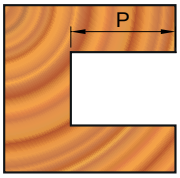

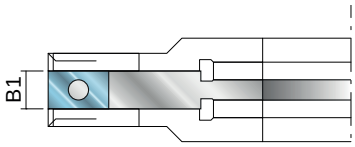

Machine	Macchina	Maschine
Application	Applicazioni	Einsatzbereich
Advantages	Vantaggi	Vorteile

Grooving cutter-head 8÷15.5 / 15÷29.5

Fresa per incastri 8÷15.5 / 15÷29.5

Nutmesserköpfe verstellbar 8÷15.5 / 15÷29.5

A021

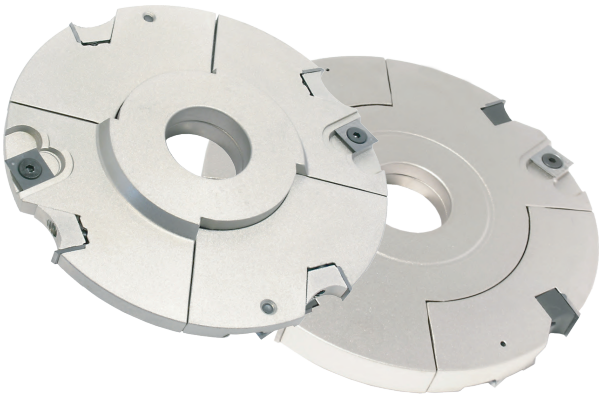

MEC MAN Tool tested according to the norm EN 847-1

Cutter-head with different thickness by quotation.

Code	D (mm)	B (mm)	d* (mm)	Z	V	P	€
A021 001	140	8÷15.5	30 (50)	4	4	25	
A021 002	160	8÷15.5	30 (50)	4	4	35	
A021 003	200	8÷15.5	30 (50)	8	8	50	
A021 004	250	8÷15.5	30 (50)	8	8	55	

*The maximum bore size is shown between the brackets.

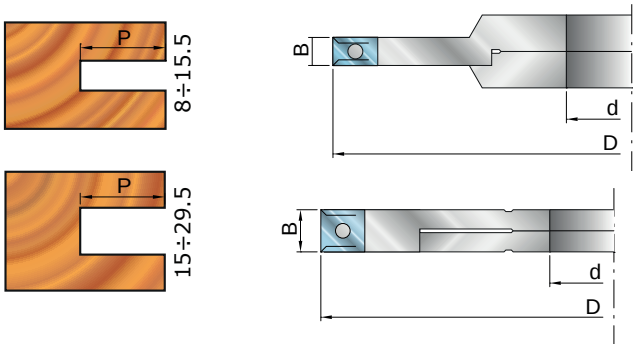

Code	D (mm)	B (mm)	d* (mm)	Z	V	P	€
A021 005	140	15÷29.5	30 (50)	4	4	40	
A021 006	160	15÷29.5	30 (50)	4	4	50	
A021 007	200	15÷29.5	30 (50)	4	4	70	
A021 008	250	15÷29.5	30 (50)	8	8	95	
A021 009	300	15÷29.5	30 (50)	8	8	120	

*The maximum bore size is shown between the brackets.

*Possibility of a straight adjustable groover with no central bound Increment of 15% from the standard price is applied.

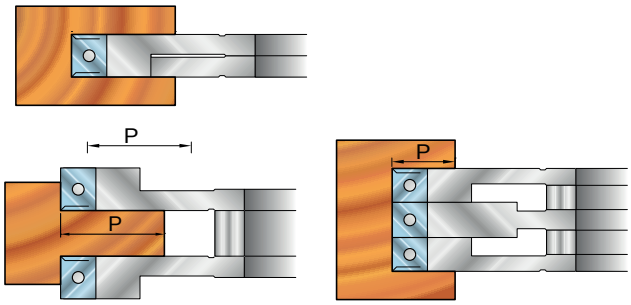

Code	Spare parts			Ref.	€
J009 002	screw	M5X7			
I007 002	spur	14X14X2			
J003 002	screw	M6-M6		8÷15.5	
J008 001	wedge	7.3mm		8÷15.5	
I001 001	knife	7.6X12X1.5		8÷15.5	
J003 001	screw	M8-M6		15÷29.5	
J005 001	nut	M8		15÷29.5	
J006 001	wedge	14mm		Addit. comp.	
I001 005	knife	15X12X1.5		Addit. comp.	

Additional cutter | Elemento aggiuntivo | Mittelteile

Code	D (mm)	B1 (mm)	d* (mm)	Z	€
A021 010	140	15	30 (50)	2	
A021 011	160	15	30 (50)	2	
A021 012	200	15	30 (50)	2	
A021 013	250	15	30 (50)	2	
A021 014	300	15	30 (50)	2	

*The maximum bore size is shown between the brackets.

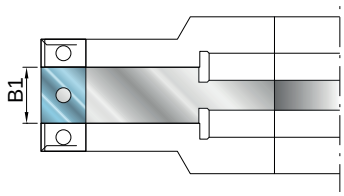

Machine	Macchina	Maschine
Application	Applicazioni	Einsatzbereich
Advantages	Vantaggi	Vorteile

BANER TOOLS

Adjustable grooving cutter-head 12÷23.5

Fresa per incastri 12÷23.5

Nutmesserköpfe verstellbar 12÷23.5

A022

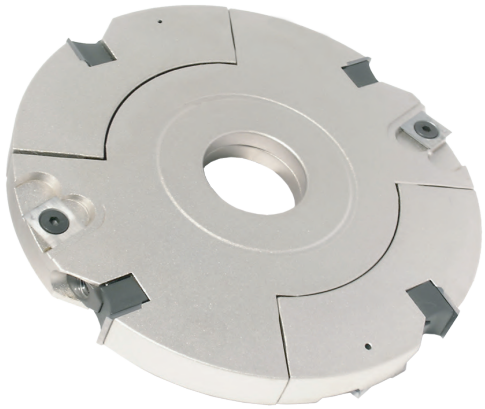

Code	D (mm)	B (mm)	d* (mm)	Z	V	P	€
A022 001	140	12÷23.5	30 (50)	4	4	40	
A022 002	160	12÷23.5	30 (50)	4	4	50	
A022 003	200	12÷23.5	30 (50)	4	4	65	
A022 004	250	12÷23.5	30 (50)	8	8	60	

**The maximum bore size is shown between the brackets.*

Tool tested according to the norm EN 847-1

Additional cutter | Elemento aggiuntivo | Mittelteile

Code	D (mm)	B1 (mm)	d* (mm)	Z	€
A022 005	140	12	30 (50)	2	
A022 006	160	12	30 (50)	2	
A022 007	200	12	30 (50)	2	
A022 008	250	12	30 (50)	2	

**The maximum bore size is shown between the brackets.*
Cutterhead with different thickness by quotation.

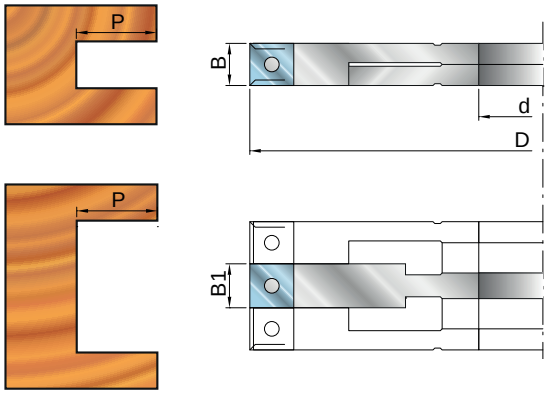

Code	Spare parts			Ref.	€
J009 002	screw	M5X7		B 12÷23.5	
I007 002	spur	14X14X2		B 12÷23.5	
J003 001	screw	M8-M6		B 12÷23.5	
J008 002	wedge	10.8mm		Addit. comp.	
I001 004	knife	12X12X1.5		Addit. comp.	

Machine	Macchina	Maschine
Application	Applicazioni	Einsatzbereich
Advantages	Vantaggi	Vorteile

Grooving cutter-head 20÷39.5 / 30÷59.5 / 50÷100

Fresa per incastri 20÷39.5 / 30÷59.5 / 50÷100

Nutmesserköpfe verstellbar 20÷39.5 / 30÷59.5 / 50÷100

A023

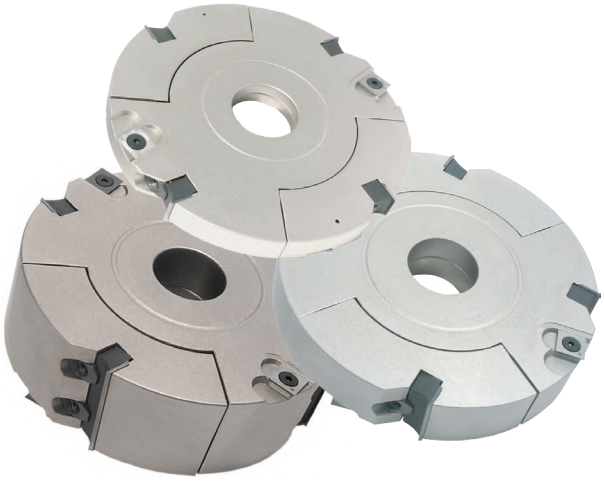

MEC MAN Tool tested according to the norm EN 847-1

Code	D (mm)	B (mm)	d* (mm)	Z	V	P	€
A023 001	140	20÷39.5	30 (50)	4	4	40	
A023 002	160	20÷39.5	30 (50)	4	4	50	
A023 003	200	20÷39.5	30 (50)	4	4	70	
A023 004	250	20÷39.5	30 (50)	8	8	95	
A023 005	300	20÷39.5	30 (50)	8	8	120	

Code	D (mm)	B (mm)	d* (mm)	Z	V	P	€
A023 006	140	30÷59.5	30 (50)	4	4	40	
A023 007	160	30÷59.5	30 (50)	4	4	50	
A023 008	200	30÷59.5	30 (50)	4	4	70	
A023 009	250	30÷59.5	30 (50)	8	8	95	
A023 010	300	30÷59.5	30 (50)	8	8	120	

Code	D (mm)	B (mm)	d* (mm)	Z	V	P	€
A023 011	140	50÷99.5	30 (50)	4	4	40	
A023 012	160	50÷99.5	30 (50)	4	4	50	
A023 013	200	50÷99.5	30 (50)	4	4	70	
A023 014	250	50÷99.5	30 (50)	8	8	95	
A023 015	300	50÷99.5	30 (50)	8	8	120	

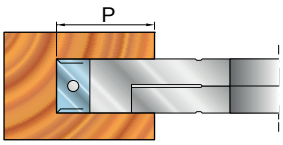

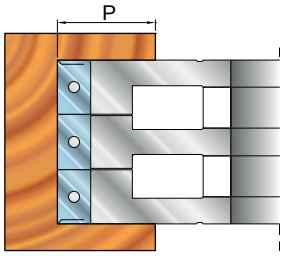

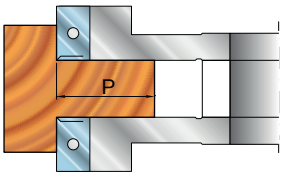

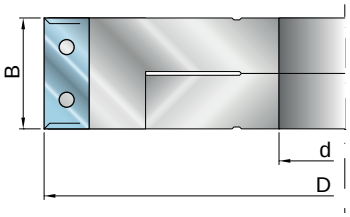

Additional cutter | Elemento aggiuntivo | Mittelteile - verstellbar

Code	D (mm)	B1 (mm)	d* (mm)	Z	Ref.	€
A023 016|021|026	140	20/30/50	30 (50)	2	A023 001|006|011	
A023 017|022|027	160	20/30/50	30 (50)	2	A023 002|007|012	
A023 018|023|028	200	20/30/50	30 (50)	2	A023 003|008|013	
A023 019|024|029	250	20/30/50	30 (50)	2	A023 004|009|014	
A023 020|025|030	300	20/30/50	30 (50)	2	A023 005|010|015	

**The maximum bore size is shown between the brackets.*

Code	Spare parts		Ref.	€
J009 002	screw	M5X7		
I007 002	spur	14X14X2		
J003 001	screw	M8-M6		
J005 001	nut	M8		
J006 002	wedge	19mm	20÷39.5	
I001 006	knife	20X12X1.5	20÷39.5	
J007 002	wedge	29mm	30÷59.5	
I003 002	knife	30X12X1.5	30÷59.5	
J007 005	wedge	49mm	50÷99.5	
I003 004	knife	50X12X1.5	50÷99.5	

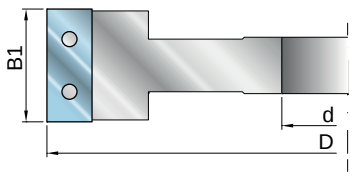

BANER TOOLS

Multi-use adjustable cutter-head 30÷59.5 Pro

Fresa multiuso regolabile 30÷59.5 Pro

Verstellbarer Mehrzweck-Schneider 30÷59.5 Pro

A024

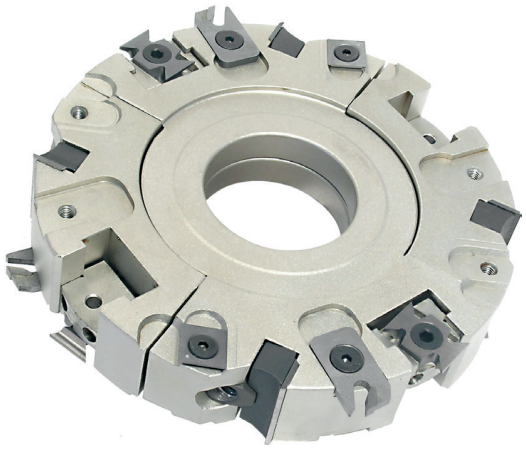

Tool tested according to the norm EN 847-1

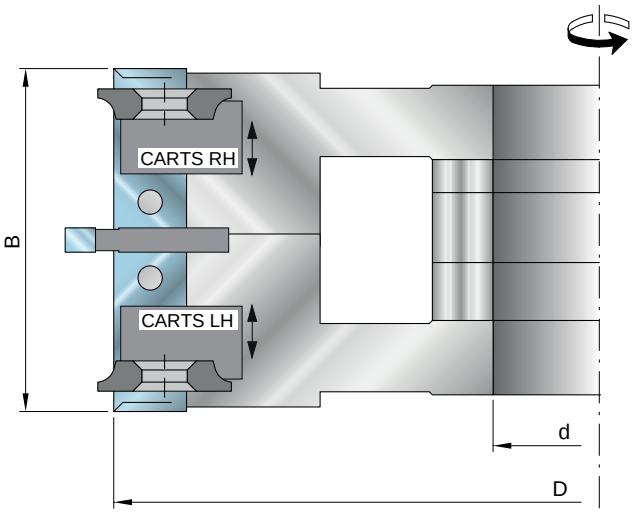

Code	D (mm)	B (mm)	d* (mm)	Z	V	LS	I	€
A024 001	160	30÷60	30 (50)	4	4	4	4	

**The maximum bore size is shown between the brackets.*

Code	Spare parts			€
J009 002	screw	M5X7		
I007 002	spur	14X14X2		
J014 001	screw	M6X14		
I015 001	radius insert	R1.5-R2-R3		
I014 001	bevellingins	45°		
J009 005	screw	M5X12		
I016 011	insert	4mm		
I016 011	insert	4mm		
J001 001	screw	M5X10		
J015 001	mobile support	RH		
J015 002	mobile support	LH		
J003 001	screw	M8-M6		
J005 001	nut	M8		
J007 002	wedge	29mm		
I003 002	knife	30X12X1.5		

Indicate the insert type : SPG1 (45°) o RGT1 (R1.5) RGT2 (R2) RGT3 (R3)

Machine	Macchina	Maschine
Application	Applicazioni	Einsatzbereich
Advantages	Vantaggi	Vorteile

Working examples

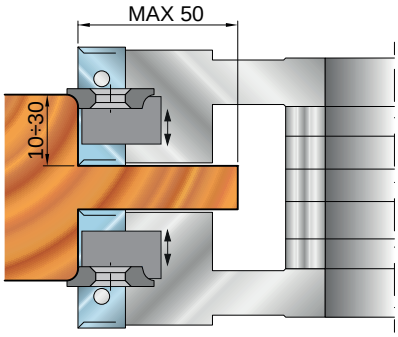

Reduced tenoning

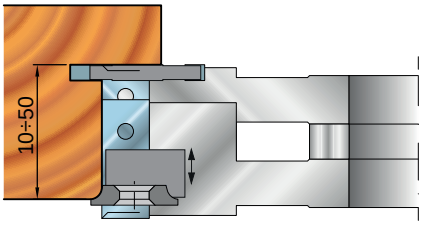

Door squaring with gasket

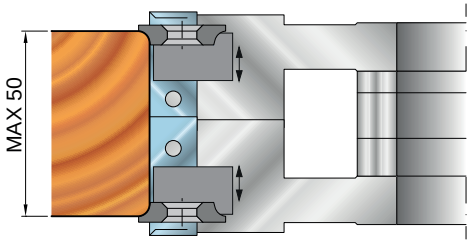

Panel squaring

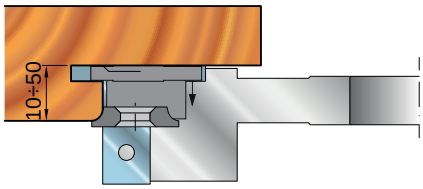

Door frame squaring

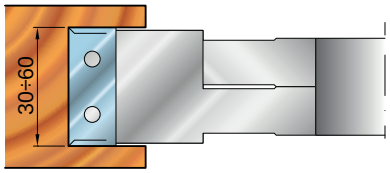

Adjustable grooves

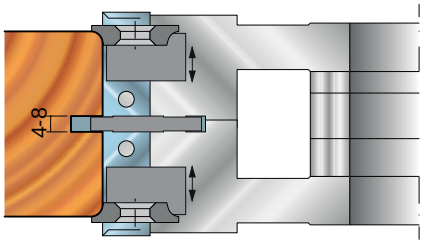

Internal window frame

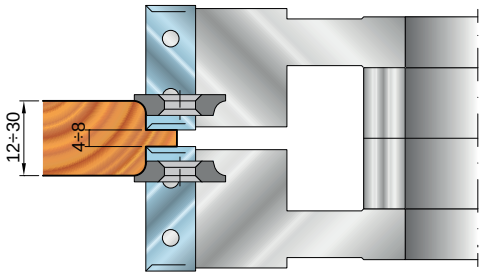

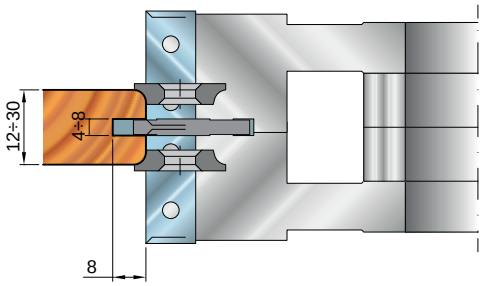

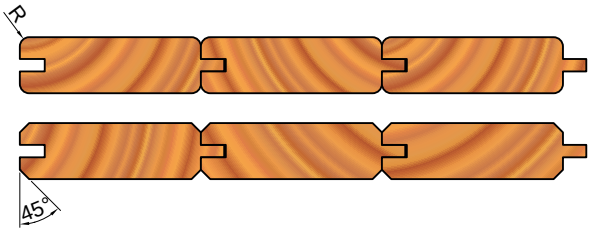

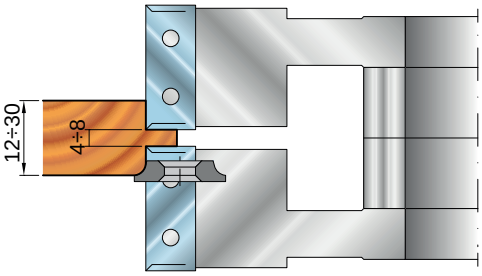

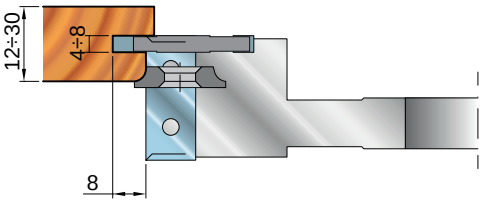

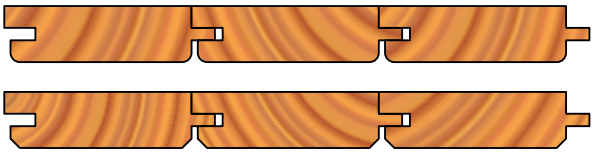

BANER TOOLS

Multi-use adjustable cutter-head 30÷59.5 Plus

Fresa multiuso regolabile 30÷59.5 Plus

Verstellbarer Mehrzweck-Schneider 30÷59.5 Plus

A025

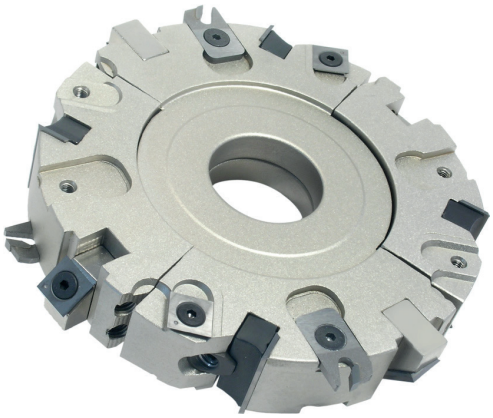

MEC MAN

Tool tested according to the norm EN 847-1

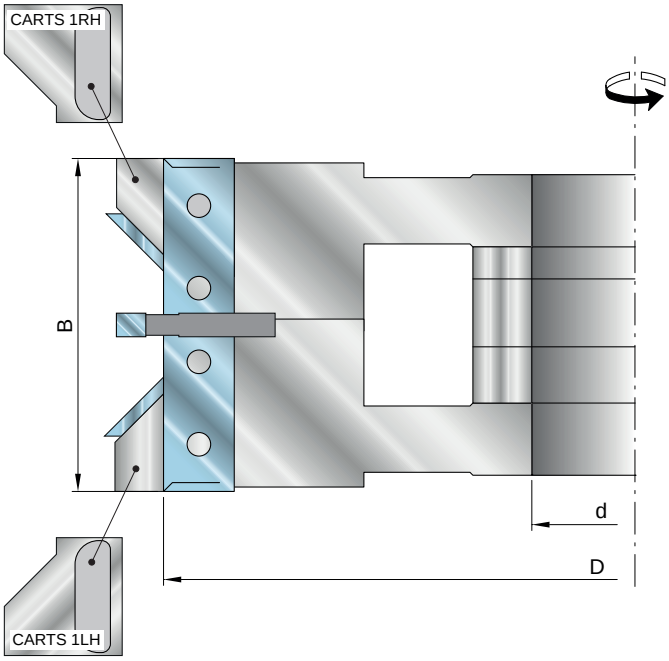

Code	D (mm)	B (mm)	d* (mm)	Z	V	LS	I	V45°	€
A025 001	160	30÷60	30 (50)	4	4	4	4	4	

The maximum bore size is shown between the brackets.

Code		Spare parts	€
J009 002	screw	M5X7	
I007 002	spur	14X14X2	
J009 005	screw	M5X12	
I016 011	insert	4mm	
I016 011	insert	4mm	
J001 004	screw	M8X12	
J016 001	mobile support 1RH		
J016 002	mobile support 1LH		
J003 001	screw	M8-M6	
J005 001	nut	M8	
J007 002	wedge	29mm	
I003 002	knife	30X12X1.5	

Machine	Macchina	Maschine
Application	Applicazioni	Einsatzbereich
Advantages	Vantaggi	Vorteile

Working examples

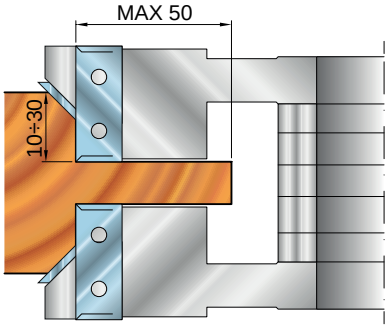

Reduced tenoning

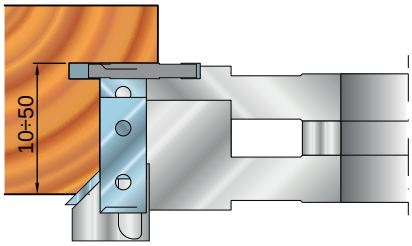

Door squaring with gasket

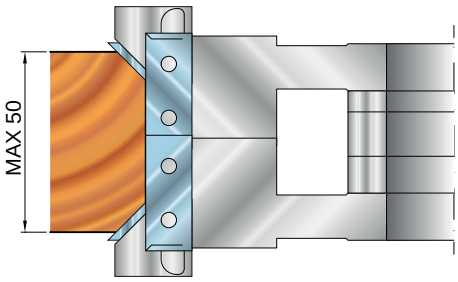

Panel squaring

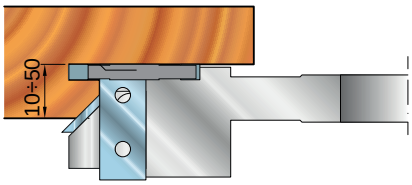

Door frame squaring

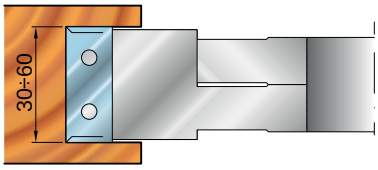

Adjustable grooves

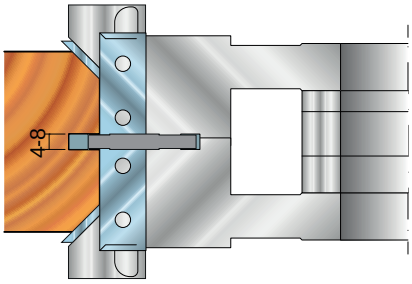

Internal window frame

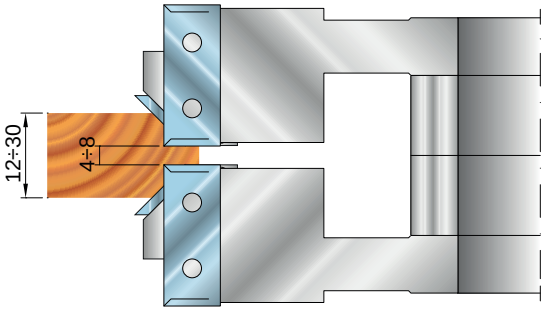

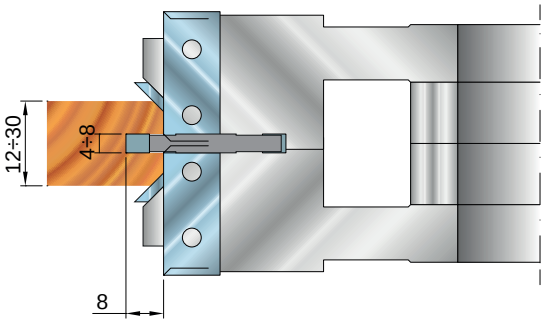

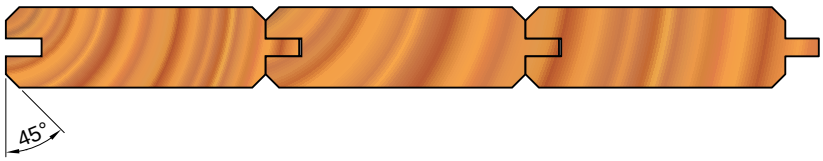

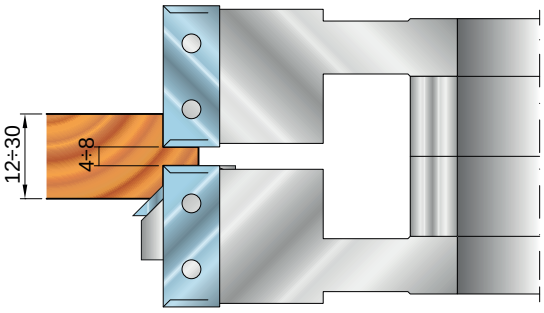

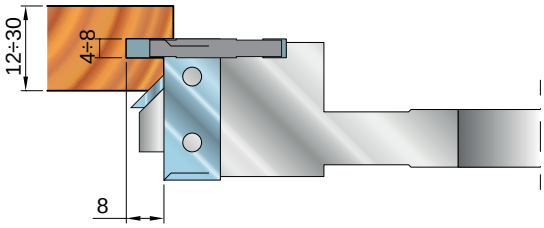

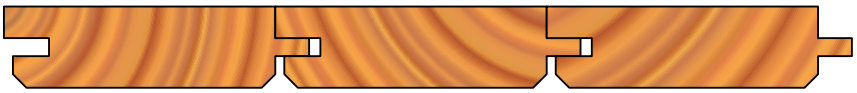

BANER TOOLS

Grooving cutter-head for Lamello

Fresa per incastri per Lamello

Nutmesserköpfe für Lamello

A026

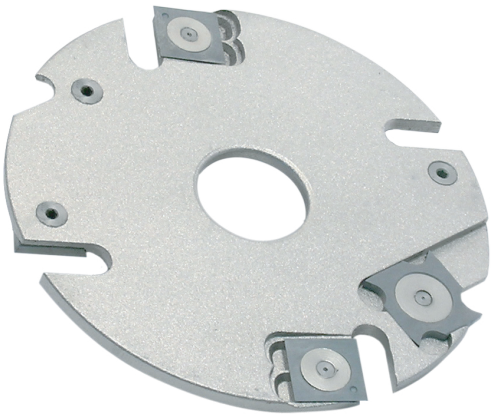

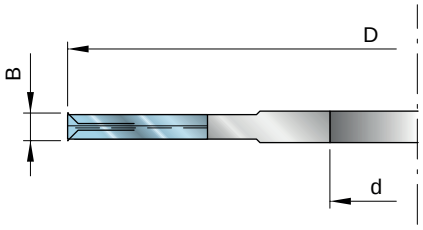

Tool tested according to the norm EN 847-1

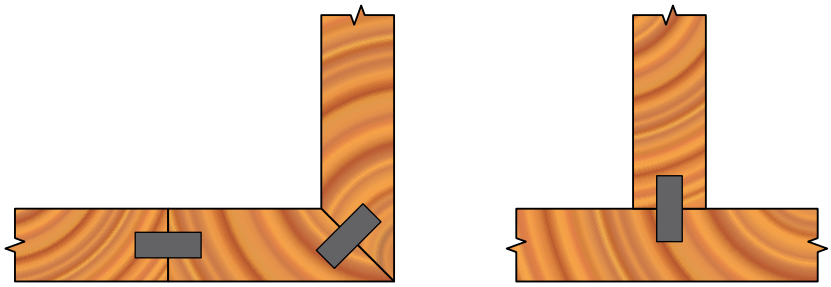

Code	D (mm)	B (mm)	d (mm)	Z	V	€
A026 001	100	4	22	4	4	

Code	Spare parts		€
J011 001	screw	M4X1.9	
J012 003	nut	D9.5X1.8	
I007 002	spur	14X14X2	
J012 002	nut	D11.5X1.8	
I009 001	knife	18X18X1.9	

Machine	Macchina	Maschine
Application	Applicazioni	Einsatzbereich
Advantages	Vantaggi	Vorteile

Hardware lodging cutter-head

Fresa per alloggio ferramenta

Nutmesserköpfe zur Aufnahme der Hardware

A027

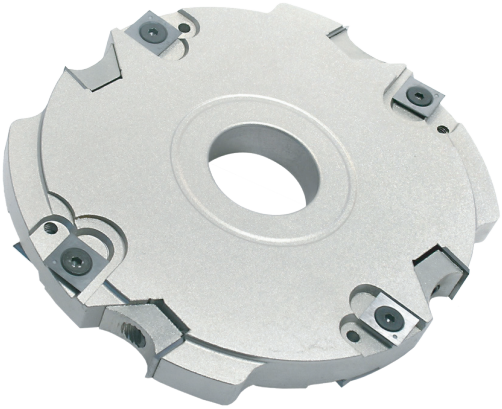

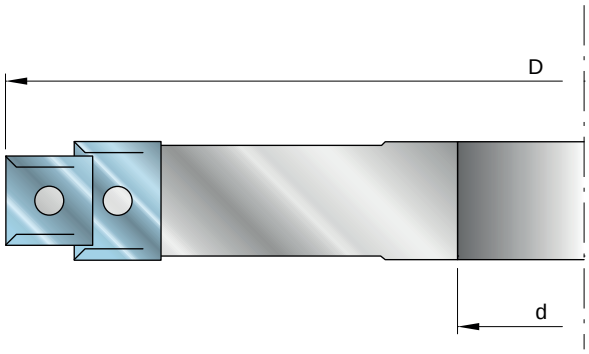

Tool tested according to the norm EN 847-1

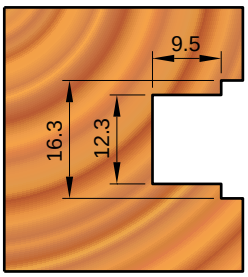

Code	D (mm)	d (mm)	Z	V	€
A027 001	160	30 (40)	4	8	

Code	Spare parts			€
J009 002	screw	M5X7		
I007 002	spur	14X14X2		
J003 001	screw	M8-M6		
J008 002	wedge	10.8mm		
I001 004	knife	12X12X1.5		
J008 003	wedge	13.7mm		
I001 005	knife	15X12X1.5		

**The maximum bore size is shown between the brackets.*

Machine	**Macchina**	**Maschine**
Application	**Applicazioni**	**Einsatzbereich**
Advantages	**Vantaggi**	**Vorteile**

BANER TOOLS

Grooving cutter-head

Fresa per incastri

Nutfräser

A028

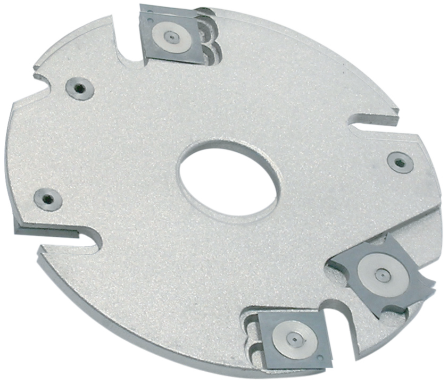

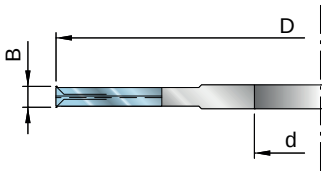

MEC MAN Tool tested according to the norm EN 847-1

Code	D (mm)	B (mm)	d (mm)	Z	V	€
A028 001	100	4	30 (45)	4	4	
A028 002	120	4	30 (45)	4	4	
A028 003	150	4	30 (45)	4	4	
A028 004	180	4	30 (45)	4	4	
A028 005	100	5	30 (45)	4	4	
A028 006	120	5	30 (45)	4	4	
A028 007	150	5	30 (45)	4	4	
A028 008	180	5	30 (45)	4	4	
A028 009	100	6	30 (45)	4	4	
A028 010	120	6	30 (45)	4	4	
A028 011	150	6	30 (45)	4	4	
A028 012	180	6	30 (45)	4	4	
A028 013	100	7	30 (45)	4	4	
A028 014	120	7	30 (45)	4	4	
A028 015	150	7	30 (45)	4	4	
A028 016	180	7	30 (45)	4	4	
A028 017	100	8	30 (45)	4	4	
A028 018	120	8	30 (45)	4	4	
A028 019	150	8	30 (45)	4	4	
A028 020	180	8	30 (45)	4	4	
A028 021	220	8	30 (45)	4	4	
A028 022	250	8	30 (45)	4	4	
A028 023	300	8	30 (45)	4	4	

Code	Spare parts			Rif	€
J011 001	screw	M4X1.9		B=4mm	
J012 003	nut	D9.5X1.8		B=4mm	
I007 002	spur	14X14X2		B=4mm	
J012 002	nut	D11.5X1.8		B=4mm	
I009 001	knife	18X18X1.9		B=4mm	
J011 002	screw	M4X3		B=5mm	
J012 003	nut	D9.5X1.8		B=5mm	
I007 002	spur	14X14X2		B=5mm	
J012 001	nut	D11.5X2.5		B=5mm	
I009 002	knife	18X18X2.9		B=5mm	
J009 002	screw	M5X7		B=6mm	
I007 002	spur	14X14X2		B=6mm	
J011 003	screw	M4X5		B=6mm	
J012 001	nut	D11.5X2.5		B=6mm	
I009 003	knife	18X18X3.9		B=6mm	
J009 002	screw	M5X7		B=7mm	
I007 002	spur	14X14X2		B=7mm	
J011 003	screw	M4X5		B=7mm	
J012 001	nut	D11.5X2.5		B=7mm	
I009 003	knife	18X18X3.9		B=7mm	
J009 002	screw	M5X7		B=8mm	
I007 002	spur	14X14X2		B=8mm	
J003 002	screw	M6-M6		B=8mm	
J008 001	wedge	7.3mm		B=8mm	
I001 001	knife	7.5X12X1.5		B=8mm	

**The maximum bore size is shown between the brackets.*

Machine	**Macchina**	**Maschine**
Application	**Applicazioni**	**Einsatzbereich**
Advantages	**Vantaggi**	**Vorteile**

A 3

Planing Piallare Hobeln

A029 pag. 38

- Modular planer cutter-head
- Gruppo componibile per piallare
- Modularer Hobelmesserkopf

A030 pag. 39

- Planing cutter-head with HW knives
- Fresa per piallare coltelli in HW
- Hobel-Messerköpfe HW

A031 pag. 40

- Planing cutter-head with HSS knives
- Fresa per piallare coltelli in HSS
- Hobel-Messerköpfe HSS

A032 pag. 41

- Gauge positioning knives
- Calibro posizionamento coltelli
- Messereinstellung Messer

A033 pag. 42

- Planing cutter-head Centrolock knives
- Fresa per piallare coltelli Centrolock
- Hobel-Messerköpfe Centrolock

A034 pag. 43

- Jointing cutter-head
- Testa rasante per teste per piallare
- Fügefräser

A035 pag. 44

- Planing cutter-head Centrolock knives with adjustable profiled knives
- Fresa per piallare con coltelli Centrolock e coltelli sagomati regolabili
- Hobel-Messerköpfe Centrolock mit Verstell-bar Profilschneiden

A036 pag. 46

- Planing cutter-head Centrolock knives with adjustable bevel cutter 45°
- Fresa per piallare con coltelli Centrolock e smussi regolabili a 45°
- Hobel-Messerköpfe Centrolock mit Verstell-bar Fasfräser 45°

A037 pag. 48

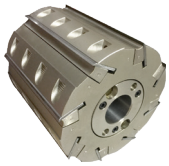

- Planing cutter-head Hydro
- Testa a piallare Hydro
- Hobel-Mmesserköpfe Hydro

A038 pag. 49

- Spiral cutter-head with reversible knives Castorfinish
- Fresa a spirale con coltelli reversibili Castor finish
- Spiralmesserköpfe mit Wendeschneiden Castorfinsh

A039 pag. 50

- Spiral cutter-head for roughing
- Fresa a spirale per sgrossare
- Spiralmesserköpfe Zum Abflachen

A040 pag. 51

- Spiral cutter-head for roughing - SecureBlock
- Fresa a spirale per sgrossare - SecureBlock
- Spiralmesserköpfe Zum Abflachen - SecureBlock

A041 pag. 52

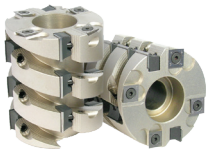

- Spiral cutter-head for roughing for Tenoning Machines
- Fresa a spirale per sgrossatura per Macchine Tenonatrici
- Spiralmesserköpfe Zum Abflachen Für Schlitz-maschinen

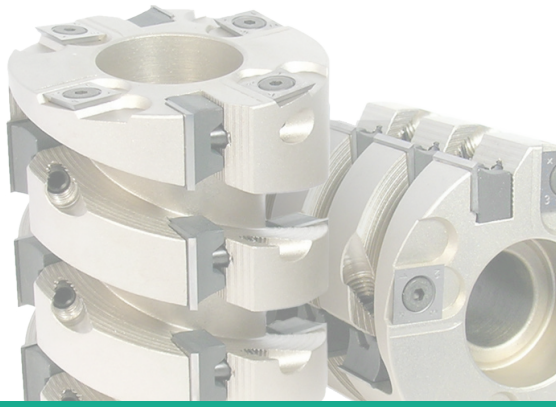

Modular planer cutter-head

Gruppo componibile per piallare

Modularer Hobelmesserkopf

A029

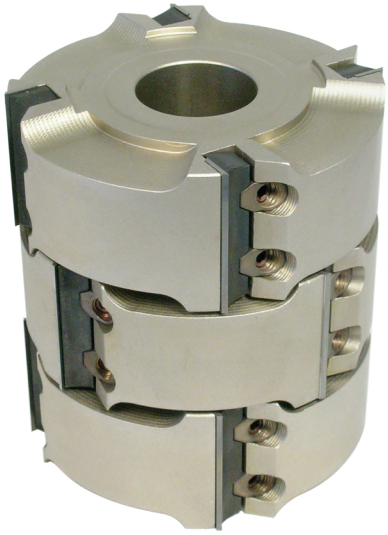

Tool tested according to the norm EN 847-1

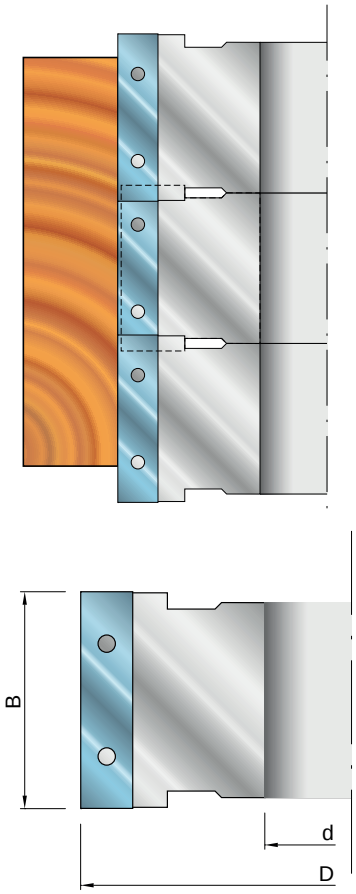

Code	D (mm)	B (mm)	d* (mm)	Z	€
A029 001	100	30	30 (35)	4	
A029 002	100	40	30 (35)	4	
A029 003	100	50	30 (35)	4	
A029 004	125	30	30 (40)	4	
A029 005	125	40	30 (40)	4	
A029 006	125	50	30 (40)	4	
A029 007	140	30	30 (50)	4	
A029 008	140	40	30 (50)	4	
A029 009	140	50	30 (50)	4	

**The maximum bore size is shown between the brackets.*

Code	Spare parts		€
J003 001	screw	M8XM6	
J005 001	nut	M8	
J007 002	wedge	29mm	
J007 004	wedge	39mm	
J007 005	wedge	49mm	
I003 002	knife	30X12X1.5	
I003 003	knife	40X12X1.5	
I003 004	knife	50X12X1.5	

Machine	**Macchina**	**Maschine**
Application	**Applicazioni**	**Einsatzbereich**
Advantages	**Vantaggi**	**Vorteile**

Planing cutter-head with HW knives

Fresa per piallare coltelli in HW

Hobel-Messerköpfe HW

A030

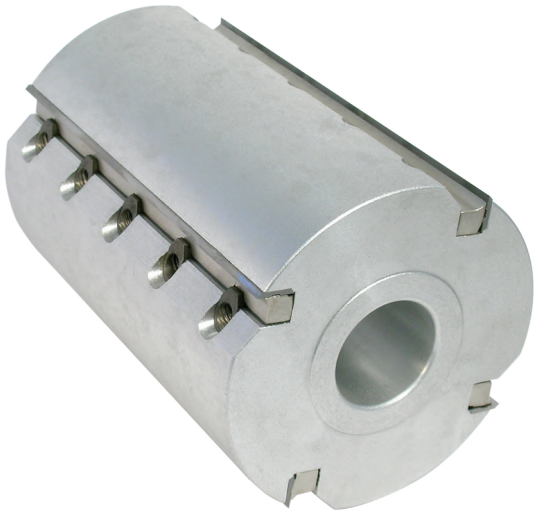

Tool tested according to the norm EN 847-1

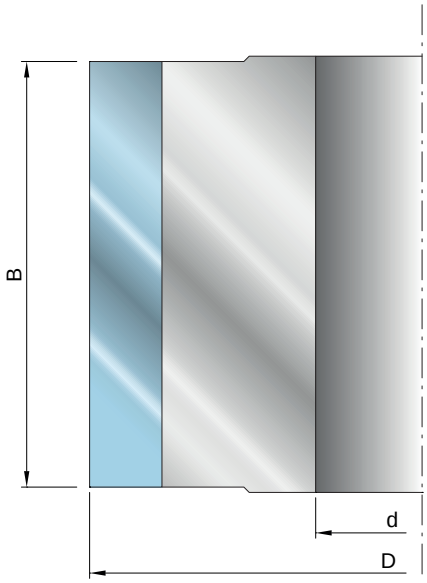

Code	D (mm)	B (mm)	d* (mm)	Z	€
A030 001	100	80	30 (35)	4	
A030 002	100	100	30 (35)	4	
A030 003	100	120	30 (35)	4	
A030 004	100	184	30 (35)	4	
A030 005	100	220	30 (35)	4	
A030 006	100	230	30 (35)	4	
A030 007	120	80	30 (40)	4	
A030 008	120	100	30 (40)	4	
A030 009	120	120	30 (40)	4	
A030 010	120	184	30 (40)	4	
A030 011	120	220	30 (40)	4	
A030 012	120	230	30 (40)	4	
A030 013	125	80	30 (40)	4	
A030 014	125	100	30 (40)	4	
A030 015	125	120	30 (40)	4	
A030 016	125	184	30 (40)	4	
A030 017	125	220	30 (40)	4	
A030 018	125	230	30 (40)	4	
A030 019	125	250	30 (40)	4	
A030 020	140	80	30 (50)	4	
A030 021	140	100	30 (50)	4	
A030 022	140	120	30 (50)	4	
A030 023	140	184	30 (50)	4	
A030 024	140	220	30 (50)	4	
A030 025	140	230	30 (50)	4	
A030 026	140	250	30 (50)	4	

**The maximum bore size is shown between the brackets*

Code	Spare parts			€
J003 001	screw	M8-M6		
J005 001	nut	M8		
I012 001	knife	80X13.6X1.8		
I012 002	knife	100X13.6X1.8		
I012 003	knife	120X13.6X1.8		
I012 004	knife	184X13.6X1.8		
I012 005	knife	220X13.6X1.8		
I012 006	knife	230X13.6X1.8		
I012 007	knife	240X13.6X1.8		
I012 008	knife	250X13.6X1.8		

Machine	**Macchina**	**Maschine**
Application	**Applicazioni**	**Einsatzbereich**
Advantages	**Vantaggi**	**Vorteile**

BANER TOOLS

Planing cutter-head with HSS knives

Fresa per piallare coltelli in HSS

Hobel-Messerköpfe HSS

A031

Tool tested according to the norm EN 847-1

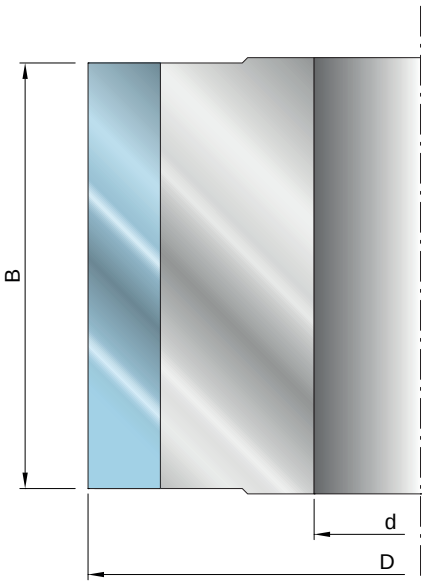

Code	D (mm)	B (mm)	d* (mm)	Z	€
A031 001	100	120	30 (35)	4	
A031 002	100	180	30 (35)	4	
A031 003	100	190	30 (35)	4	
A031 004	125	120	30 (40)	4	
A031 005	125	130	30 (40)	4	
A031 006	125	150	30 (40)	4	
A031 007	125	160	30 (40)	4	
A031 008	125	180	30 (40)	4	
A031 009	125	190	30 (40)	4	
A031 010	125	200	30 (40)	4	
A031 011	125	230	30 (40)	4	
A031 012	125	250	30 (40)	4	
A031 013	140	120	30 (50)	4	
A031 014	140	130	30 (50)	4	
A031 015	140	150	30 (50)	4	
A031 016	140	160	30 (50)	4	
A031 017	140	180	30 (50)	4	
A031 018	140	190	30 (50)	4	
A031 019	140	200	30 (50)	4	
A031 020	140	230	30 (50)	4	
A031 021	140	250	30 (50)	4	

**The maximum bore size is shown between the brackets*
Aluminium made, for steel made +15%

Code	Spare parts		€
J001 006	screw	M8X20	
I010 004	knife	120X30X3	
I010 005	knife	130X30X3	
I010 007	knife	150X30X3	
I010 008	knife	160X30X3	
I010 009	knife	180X30X3	
I010 010	knife	190X30X3	
I010 011	knife	200X30X3	
I010 013	knife	230X30X3	
I010 014	knife	240X30X3	
I010 015	knife	250X30X3	

Machine	Macchina	Maschine
Application	Applicazioni	Einsatzbereich
Advantages	Vantaggi	Vorteile

Gauge positioning knives

Calibro posizionamento coltelli

Messereinstellung Messer

A032

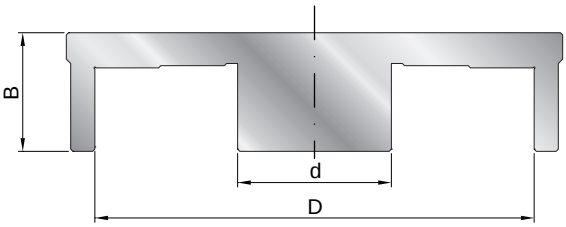

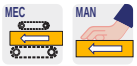

Tool tested according to the norm EN 847-1

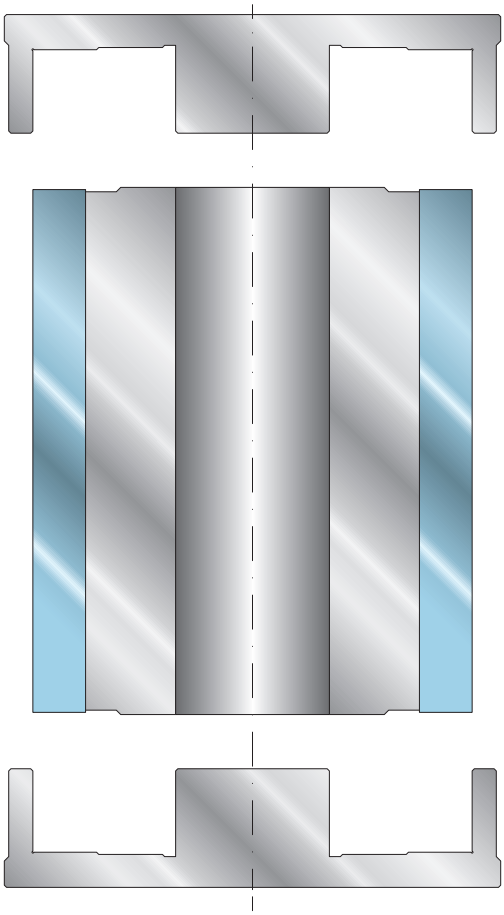

Code	D (mm)	B (mm)	d (mm)	€
A032 001	100	30	30 (35)	
A032 002	120	30	30 (50)	
A032 003	125	30	30 (50)	
A032 004	140	30	30 (50)	

Machine	Macchina	Maschine
Application	Applicazioni	Einsatzbereich
Advantages	Vantaggi	Vorteile

BANER TOOLS

Planing cutter-head centrolock knives

Fresa per piallare coltelli centrolock

Hobel-Messerköpfe Centrolock

A033

MEC MAN Tool tested according to the norm EN 847-1

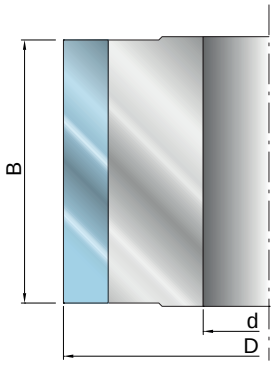

Code	Spare parts		knife Centrolock HSS	€
J001 006	screw	M8X20		
I011 011	knife	130X16X3		
I011 013	knife	150X16X3		
I011 015	knife	170X16X3		
I011 016	knife	180X16X3		
I011 017	knife	190X16X3		
I011 018	knife	210X16X3		
I011 020	knife	230X16X3		
I011 022	knife	240X16X3		
I011 023	knife	260X16X3		
I011 024	knife	270X16X3		
I011 026	knife	310X16X3		

Code	D (mm)	B (mm)	d* (mm)	Z	€
A033 001	125	130	30 (40)	2	
A033 002	125	150	30 (40)	2	
A033 003	125	170	30 (40)	2	
A033 004	125	180	30 (40)	2	
A033 005	125	190	30 (40)	2	
A033 006	125	210	30 (40)	2	
A033 007	125	230	30 (40)	2	
A033 008	125	240	30 (40)	2	
A033 009	125	260	30 (40)	2	
A033 010	125	270	30 (40)	2	
A033 011	125	310	30 (40)	2	
A033 012	140	130	30 (50)	2	
A033 013	140	150	30 (50)	2	
A033 014	140	170	30 (50)	2	
A033 015	140	180	30 (50)	2	
A033 016	140	190	30 (50)	2	
A033 017	140	210	30 (50)	2	
A033 018	140	230	30 (50)	2	
A033 019	140	240	30 (50)	2	
A033 020	140	260	30 (50)	2	
A033 021	140	270	30 (50)	2	
A033 022	140	310	30 (50)	2	
A033 023	125	130	30 (40)	4	
A033 024	125	150	30 (40)	4	
A033 025	125	170	30 (40)	4	
A033 026	125	180	30 (40)	4	
A033 027	125	190	30 (40)	4	
A033 028	125	210	30 (40)	4	
A033 029	125	230	30 (40)	4	
A033 030	125	240	30 (40)	4	
A033 031	125	260	30 (40)	4	
A033 032	125	270	30 (40)	4	
A033 033	125	310	30 (40)	4	
A033 034	140	130	30 (50)	4	
A033 035	140	150	30 (50)	4	
A033 036	140	170	30 (50)	4	
A033 037	140	180	30 (50)	4	
A033 038	140	190	30 (50)	4	
A033 039	140	210	30 (50)	4	
A033 040	140	230	30 (50)	4	
A033 041	140	240	30 (50)	4	
A033 042	140	260	30 (50)	4	
A033 043	140	270	30 (50)	4	
A033 044	140	310	30 (50)	4	

Machine	Macchina	Maschine
Application	Applicazioni	Einsatzbereich
Advantages	Vantaggi	Vorteile

Jointing cutter-head

Testa rasante per teste per piallare

Fügefräser

A034

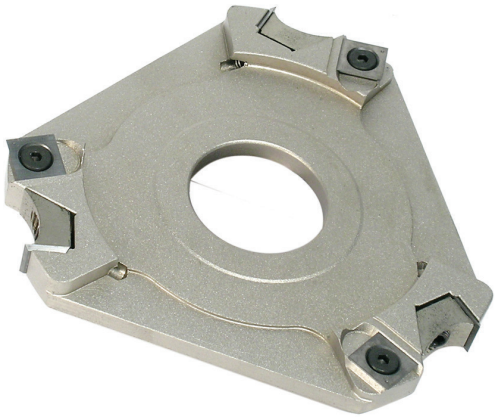

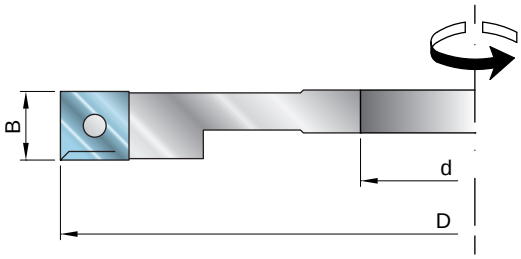

Tool tested according to the norm EN 847-1

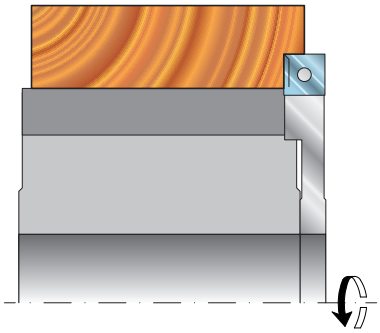

Code	D (mm)	B (mm)	d (mm)	Z	€
A034 001	125	12	30 (35)	3+3	
A034 002	140	12	30 (40)	3+3	
A034 003	145	12	30 (40)	3+3	
A034 004	154	12	30 (40)	3+3	
A034 005	165	12	30 (40)	3+3	
A034 006	125	12	30 (35)	4+2	
A034 007	145	12	30 (40)	4+2	
A034 008	165	12	30 (40)	4+2	

Code	Spare parts			€
J009 002	screw	M5X7		
I007 002	spur	14X14X2		
J003 001	screw	M8-M6		
J008 002	wedge	10.8mm		
I001 004	knife	12X12X1.5		

Machine	Macchina	Maschine
Application	Applicazioni	Einsatzbereich
Advantages	Vantaggi	Vorteile

BANER TOOLS

Planing cutter-head centrolock knives with adjustable profiled knives

Fresa per piallare con coltelli Centrolock e coltelli sagomati regolabili

Hobel-Messerköpfe Centrolock mit Verstellbar Profilschneiden

A035

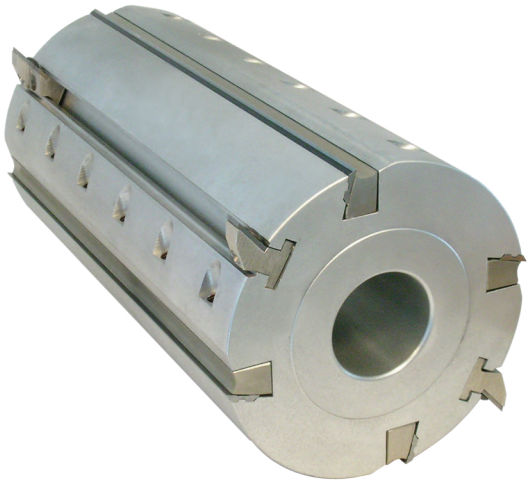

MEC MAN Tool tested according to the norm EN 847-1

Code	D (mm)	B (mm)	d* (mm)	Z	€
A035 001	125	130	30 (40)	2+2	
A035 002	125	150	30 (40)	2+2	
A035 003	125	170	30 (40)	2+2	
A035 004	125	180	30 (40)	2+2	
A035 005	125	190	30 (40)	2+2	
A035 006	125	210	30 (40)	2+2	
A035 007	125	230	30 (40)	2+2	
A035 008	125	240	30 (40)	2+2	
A035 009	125	260	30 (40)	2+2	
A035 010	125	270	30 (40)	2+2	
A035 011	125	310	30 (40)	2+2	
A035 012	140	130	30 (50)	4+2	
A035 013	140	150	30 (50)	4+2	
A035 014	140	170	30 (50)	4+2	
A035 015	140	180	30 (50)	4+2	
A035 016	140	190	30 (50)	4+2	
A035 017	140	210	30 (50)	4+2	
A035 018	140	230	30 (50)	4+2	
A035 019	140	240	30 (50)	4+2	
A035 020	140	260	30 (50)	4+2	
A035 021	140	270	30 (50)	4+2	
A035 022	140	310	30 (50)	4+2	

**The maximum bore size is shown between the brackets*
ALU Construction - Steel construction +15%

Code 27X20X2	Knife	R	Ref.	€
I021 001		3	B	
I021 002		4	B	
I021 003		5	B	
I021 004		6	B	
I021 005		7	B	
I021 006		8	B	
I021 007		9	B	
I021 008		10	B	
I021 009		45°	B	

Code 27X20X2	Knife	R	Ref.	€
I021 010		3	A	
I021 011		4	A	
I021 012		5	A	
I021 013		6	A	
I021 014		7	A	
I021 015		8	A	
I021 016		9	A	
I021 017		10	A	
I021 018		45°	A	

Code	Spare parts		knife Centrolock HSS	€
J001 002	screw	M6X12		
J018 001	mobile support 4-A			
J018 002	mobile support 4-B			
J001 006	screw	M8X20		
I011 011	knife	130X16X3		
I011 013	knife	150X16X3		
I011 015	knife	170X16X3		
I011 016	knife	180X16X3		
I011 017	knife	190X16X3		
I011 018	knife	210X16X3		
I011 020	knife	230X16X3		
I011 022	knife	240X16X3		
I011 023	knife	260X16X3		
I011 024	knife	270X16X3		
I011 026	knife	310X16X3		

Machine	Macchina	Maschine
Application	Applicazioni	Einsatzbereich
Advantages	Vantaggi	Vorteile

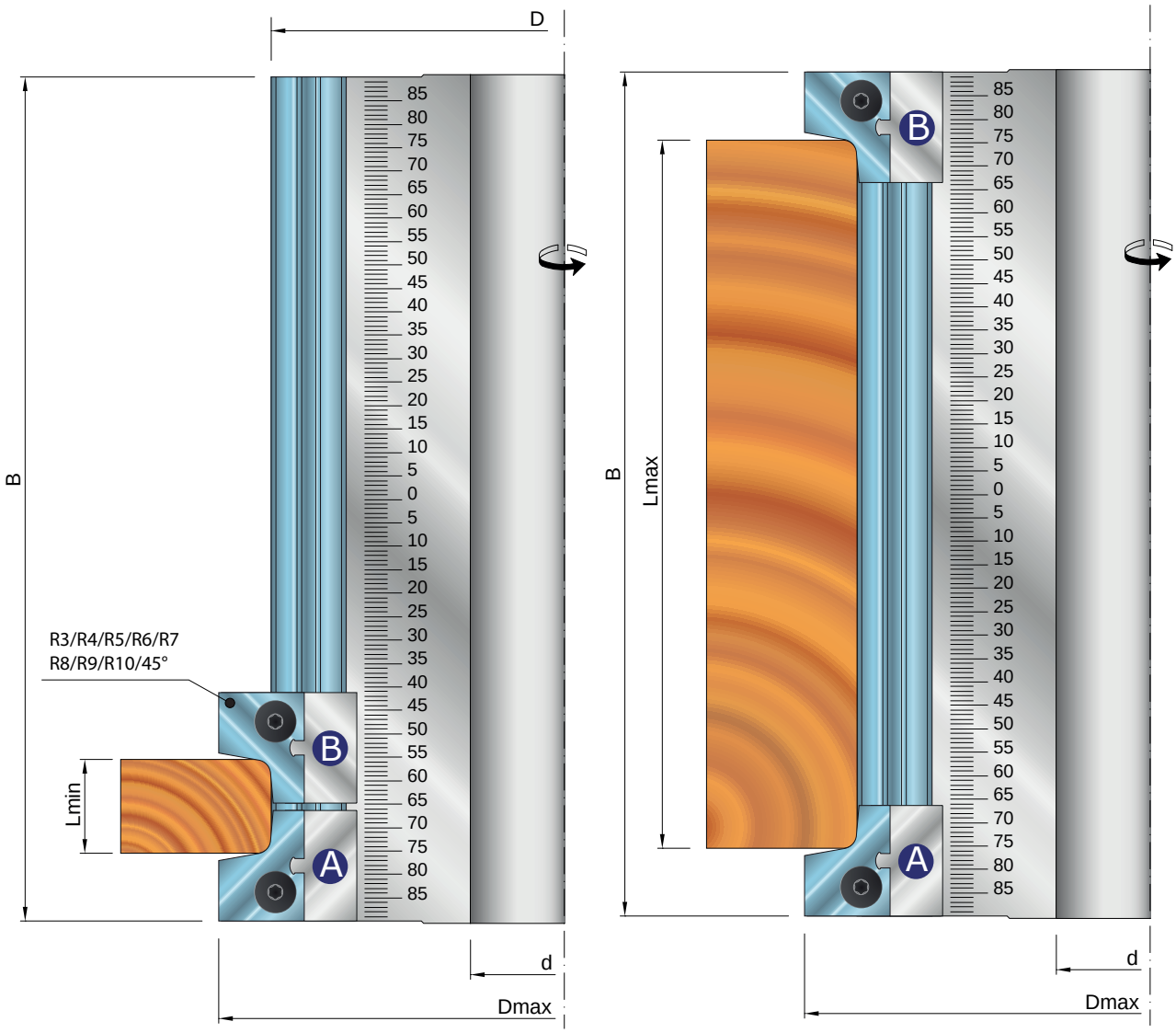

Reference Table

Radius	Lmin (mm)	Lmax (mm)
3	20	B-28
4	22	B-26
5	22	B-26
6	23	B-25
7	23	B-25
8	24	B-24
9	24	B-24
10	25	B-23
45°	24 (8.5X45°)	B-25

BANER TOOLS

Planing cutter-head centrolock knives with adjustable bevel cutter 45°

Fresa per piallare con coltelli Centrolock e smussi regolabili a 45°

Hobel-Messerköpfe Centrolock mit Verstellbar Fasfräser 45°

A036

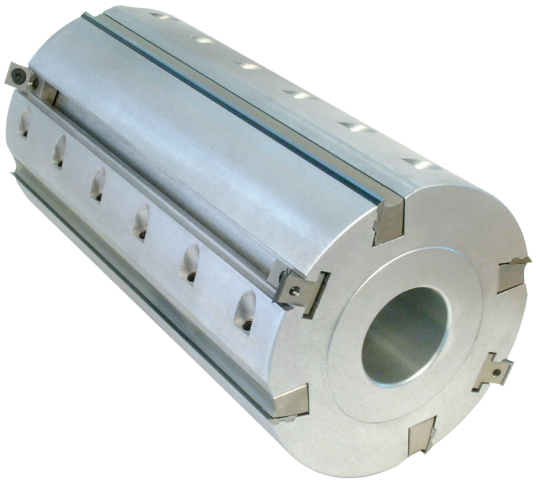

MEC MAN

Tool tested according to the norm EN 847-1

Code	D (mm)	B (mm)	d* (mm)	Z	€
A036 001	125	130	30 (40)	2+2	
A036 002	125	150	30 (40)	2+2	
A036 003	125	170	30 (40)	2+2	
A036 004	125	180	30 (40)	2+2	
A036 005	125	190	30 (40)	2+2	
A036 006	125	210	30 (40)	2+2	
A036 007	125	230	30 (40)	2+2	
A036 008	125	240	30 (40)	2+2	
A036 009	125	260	30 (40)	2+2	
A036 010	125	270	30 (40)	2+2	
A036 011	125	310	30 (40)	2+2	
A036 012	140	130	30 (50)	4+2	
A036 013	140	150	30 (50)	4+2	
A036 014	140	170	30 (50)	4+2	
A036 015	140	180	30 (50)	4+2	
A036 016	140	190	30 (50)	4+2	
A036 017	140	210	30 (50)	4+2	
A036 018	140	230	30 (50)	4+2	
A036 019	140	240	30 (50)	4+2	
A036 020	140	260	30 (50)	4+2	
A036 021	140	270	30 (50)	4+2	
A036 022	140	310	30 (50)	4+2	

**The maximum bore size is shown between the brackets*
ALU Construction - Steel construction +15%

Code	Spare parts		€
J009 002	screw	M5X7	
I007 002	spur	14X14X2	
J001 002	screw	M6X12	
J017 001	mobile support		
J017 002	mobile support		

Code	Spare parts		knife Centrolock HSS	€
J001 006	screw	M8X20		
I011 011	knife	130X16X3		
I011 013	knife	150X16X3		
I011 015	knife	170X16X3		
I011 016	knife	180X16X3		
I011 017	knife	190X16X3		
I011 018	knife	210X16X3		
I011 020	knife	230X16X3		
I011 022	knife	240X16X3		
I011 023	knife	260X16X3		
I011 024	knife	270X16X3		
I011 026	knife	310X16X3		

Machine	**Macchina**	**Maschine**
Application	**Applicazioni**	**Einsatzbereich**
Advantages	**Vantaggi**	**Vorteile**

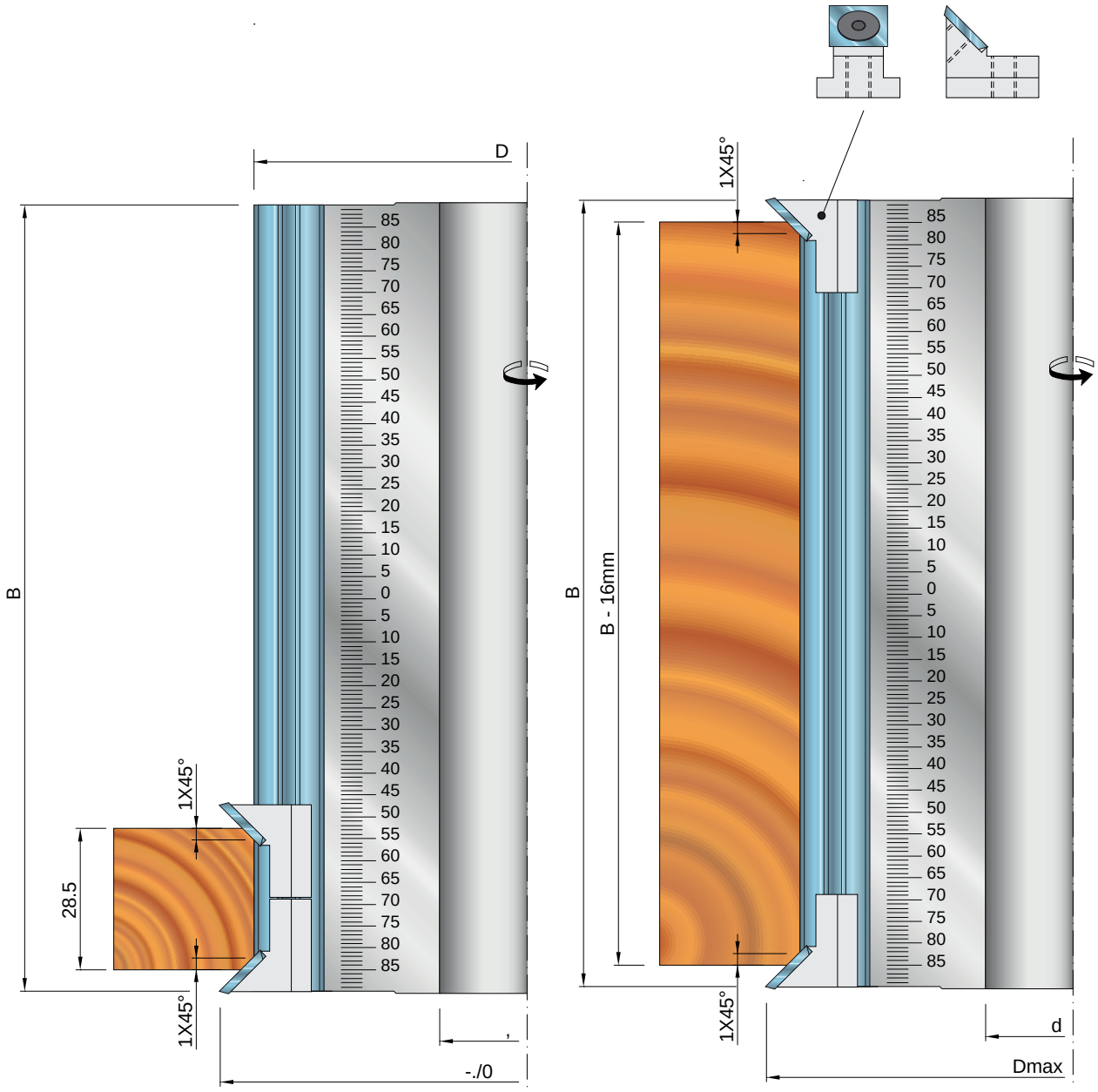

BANER TOOLS

A037

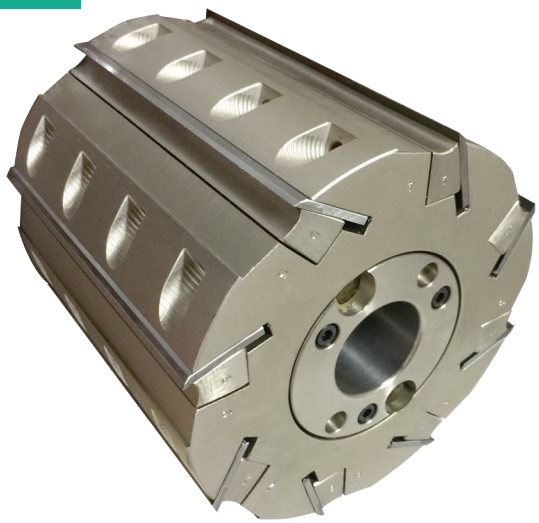

MEC MAN Tool tested according to the norm EN 847-1

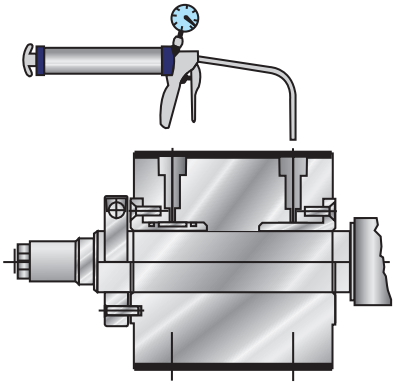

Code	Spare parts		€
J001 006	screw	M8X20	
I010 001	knife	60X30X3	
I010 003	knife	100X30X3	
I010 005	knife	130X30X3	
I010 007	knife	150X30X3	
I010 008	knife	160X30X3	
I010 009	knife	180X30X3	
I010 013	knife	230X30X3	
I010 014	knife	240X30X3	
I010 016	knife	260X30X3	

Code	D (mm)	B (mm)	d (mm)	Z	€
A037 001	143	60	30 (40)	4	
A037 002	143	100	30 (40)	4	
A037 003	143	130	30 (40)	4	
A037 004	143	150	30 (40)	4	
A037 005	143	160	30 (40)	4	
A037 006	143	230	30 (40)	4	
A037 007	163	60	50/60	4	
A037 008	163	100	50/60	4	
A037 009	163	130	50/60	4	
A037 010	163	150	50/60	4	
A037 011	163	160	50/60	4	
A037 012	163	180	50/60	4	
A037 013	163	230	50/60	4	
A037 014	163	260	50/60	4	
A037 015	163	60	50/60	6	
A037 016	163	100	50/60	6	
A037 017	163	130	50/60	6	
A037 018	163	150	50/60	6	
A037 019	163	160	50/60	6	

Code	D (mm)	B (mm)	d (mm)	Z	€
A037 020	163	180	50/60	6	
A037 021	163	230	50/60	6	
A037 022	163	260	50/60	6	
A037 023	203	150	50/60	6	
A037 024	203	230	50/60	6	
A037 025	163	60	50/60	8	
A037 026	163	100	50/60	8	
A037 027	163	130	50/60	8	
A037 028	163	150	50/60	8	
A037 029	163	160	50/60	8	
A037 030	163	180	50/60	8	
A037 031	163	230	50/60	8	
A037 032	163	260	50/60	8	
A037 033	203	150	50/60	8	
A037 034	203	230	50/60	8	
A037 035	203	150	50/60	10	
A037 036	203	230	50/60	10	
A037 037	203	240	50/60	10	
A037 038	203	250	50/60	10	

**The maximum bore size is shown between the brackets.*

Machine	Macchina	Maschine
Application	Applicazioni	Einsatzbereich
Advantages	Vantaggi	Vorteile

Spiral cutter-head with reversible knives Castorfinish

Fresa a spirale con coltelli reversibili Castorfinish

Spiralmesserköpfe mit Wendeschneiden Castorfinsh

A038

MEC MAN Tool tested according to the norm EN 847-1

Code	D (mm)	B (mm)	d* (mm)	Z	€
A038 001	100	120	30 (35)	27	
A038 002	100	140	30 (35)	33	
A038 003	100	190	30 (35)	42	
A038 004	120	118	30 (40)	27	
A038 005	120	184	30 (40)	42	
A038 006	120	220	30 (40)	51	
A038 007	120	230	30 (40)	51	
A038 008	125	118	30 (50)	27	
A038 009	125	140	30 (50)	33	
A038 010	125	184	30 (50)	42	
A038 011	125	220	30 (50)	51	
A038 012	125	230	30 (50)	51	
A038 013	125	250	30 (50)	57	
A038 014	140	118	30 (50)	27	
A038 015	140	184	30 (50)	42	
A038 016	140	220	30 (50)	51	
A038 017	140	230	30 (50)	51	
A038 018	140	250	30 (50)	57	

**The maximum bore size is shown between the brackets*
ALU Construction - Steel construction +15%

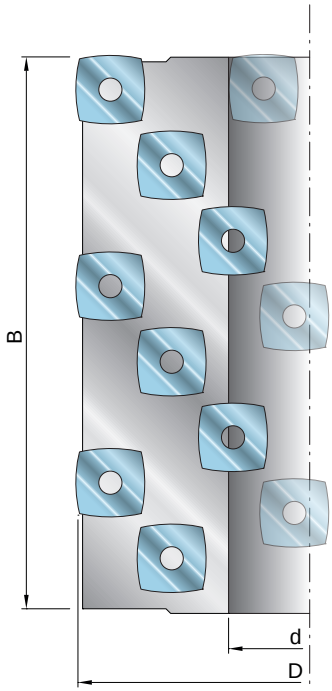

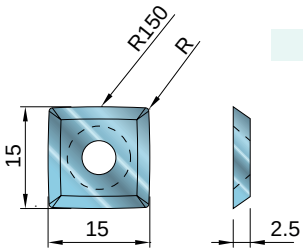

Spare part detail

Code	Spare parts		€
J014 003	screw	M5X12.6	
I007 005	knife	15X15X2.5 R150	

Machine	**Macchina**	**Maschine**
Application	**Applicazioni**	**Einsatzbereich**
Advantages	**Vantaggi**	**Vorteile**

BANER TOOLS

Spiral cutter-head for roughing

Fresa a spirale per sgrossare

Spiralmesserköpfe Zum Abflachen

A039

Tool tested according to the norm EN 847-1

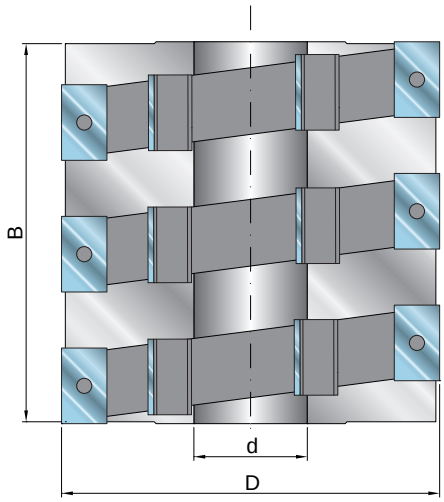

Code	D (mm)	B (mm)	d* (mm)	Z	€
A039 001	100	120	30 (35)	15	
A039 002	100	140	30 (35)	18	
A039 003	100	190	30 (35)	27	
A039 004	120	118	30 (40)	15	
A039 005	120	184	30 (40)	24	
A039 006	120	220	30 (40)	30	
A039 007	120	230	30 (40)	30	
A039 008	125	118	30 (40)	15	
A039 009	125	140	30 (40)	18	
A039 010	125	184	30 (40)	24	
A039 011	125	220	30 (40)	30	
A039 012	125	230	30 (40)	30	
A039 013	125	250	30 (40)	30	
A039 014	140	118	30 (50)	15	
A039 015	140	184	30 (50)	24	
A039 016	140	220	30 (50)	30	
A039 017	140	230	30 (50)	30	
A039 018	140	250	30 (50)	30	

**The maximum bore size is shown between the brackets*

ALU Construction - Steel construction +15%

Code	Spare parts		€
J003 001	screw	M8-M6	
J007 002	wedge	29mm	
I006 001	knife	30X12X1.5 40°	

Machine	Macchina	Maschine
Application	Applicazioni	Einsatzbereich
Advantages	Vantaggi	Vorteile

Spiral cutter-head for roughing - SecureBlock

Fresa a spirale per sgrossare - SecureBlock

Spiralmesserköpfe Zum Abflachen - SecureBlock

A040

Tool tested according to the norm EN 847-1

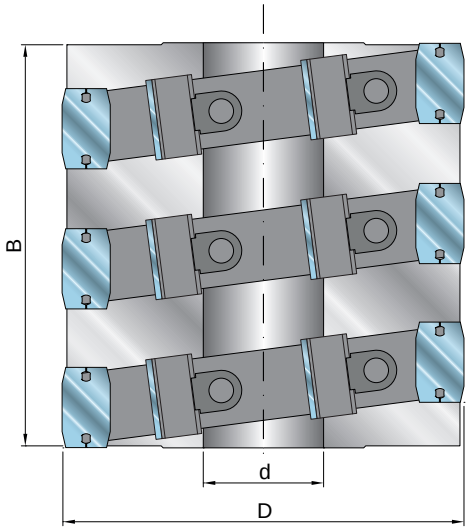

Code	D (mm)	B (mm)	d* (mm)	Z	€
A040 001	100	120	30 (35)	15	
A040 002	100	140	30 (35)	18	
A040 003	100	190	30 (35)	27	
A040 004	120	118	30 (40)	15	
A040 005	120	184	30 (40)	24	
A040 006	120	220	30 (40)	30	
A040 007	120	230	30 (40)	30	
A040 008	125	118	30 (40)	15	
A040 009	125	140	30 (40)	18	
A040 010	125	184	30 (40)	24	
A040 011	125	220	30 (40)	30	
A040 012	125	230	30 (40)	30	
A040 013	125	250	30 (40)	30	
A040 014	140	118	30 (50)	15	
A040 015	140	184	30 (50)	24	
A040 016	140	220	30 (50)	30	
A040 017	140	230	30 (50)	30	
A040 018	140	250	30 (50)	30	

**The maximum bore size is shown between the brackets*

ALU Construction - Steel construction +15%

Code	Spare parts		€
J003 001	screw	M8-M6	
J005 001	nut	M8	
J007 002	wedge	29mm	
I006 002	knife	30X14X2.5	

Machine	Macchina	Maschine
Application	Applicazioni	Einsatzbereich
Advantages	Vantaggi	Vorteile

BANER TOOLS

Spiral cutter-head for roughing for Tenoning Machines

Fresa a spirale per sgrossatura per Macchine Tenonatrici

Spiralmesserköpfe Zum Abflachen Für Schlitzmaschinen

A041

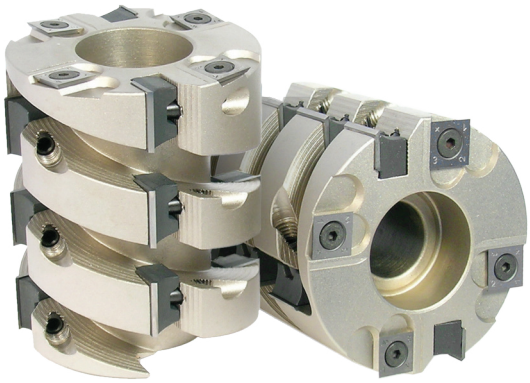

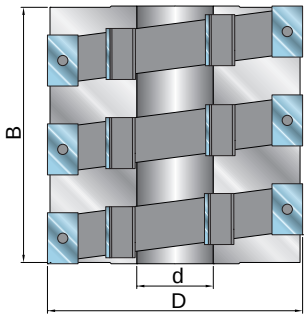

Tool tested according to the norm EN 847-1

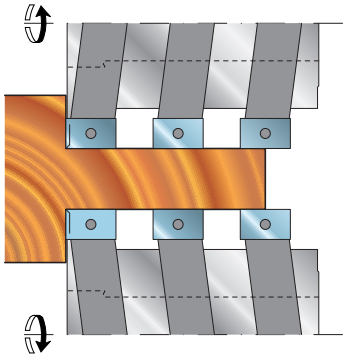

Code	D (mm)	B (mm)	d (mm)	Z	€
A041 001	85	100	25	12	
A041 002	85	115	25	14	
A041 003	120	130	30	16	
A041 004	120	150	30	16	

**Only steel construction*

Code	Spare parts		€
J009 002	screw	M5X7	
I007 002	knife	14X14X2	
J003 001	screw	M8-M6	
J006 002	wedge	19mm	
I001 006	knife	20X12X1.5	

Machine	Macchina	Maschine
Application	Applicazioni	Einsatzbereich
Advantages	Vantaggi	Vorteile

A 4

Rounding, Profiling, Edge Banding · Ragnatura, Profilatura, Bordatura · Abrunden, Profileren, Kantenbearbeitung

A042 pag. 54

Concave quadrant round-off cutter-head

Fresa a raggiare quarti ti tondo concavi

Radiusfräser für viertelrunde Konkaven

A043 pag. 55

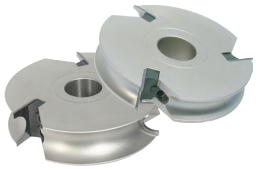

Concave half-roundings cutter-head

Fresa a raggiare mezzo tondo concavo

Radiusfräser für Halbrundungen Konkaven

A044 pag. 56

Concave multi-radius cutter-head

Fresa a raggio multiplo concavo

Konkave Mehrfach-Radius Fräser

A045 pag. 57

Convex quadrant round-off cutter-head

Fresa a raggiare quarti di tondo convessi

Radiusfräser für viertelrunde konvexen

A046 pag. 58

Convex half-roundings cutter-head

Fresa a raggiare mezzo tondo convesso

Konvex Halbrundungen Fräser

A047 pag. 59

Multi-profile cutter-head

Fresa multi-profilo

Mehrprofil-Messerkopf

A048 pag. 61

Set of multi-profile cutter-heads

Set di frese multi-profilo

Satz von Mehrprofil-Messerköpfen

A049 pag. 64

Straight cutter-head for Edge Banding Machines

Fresa dritta per Macchine Bordatrici

Gerade Messerköpfe Für Kantenanleimmaschinen

A050 pag. 65

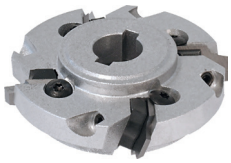

Round-off cutter-head for Edge Banding Machines

Fresa raggiata per Macchine Bordatrici

Radiusschneider für Kantenanleimmaschinen

A051 pag. 66

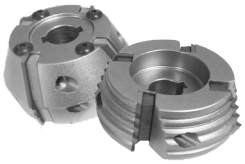

Profiled cutter-head for Edge Banding Machines

Fresa sagomata per Macchine Bordatrici

Profilmesserköpfe für Kantenanleimmaschinen

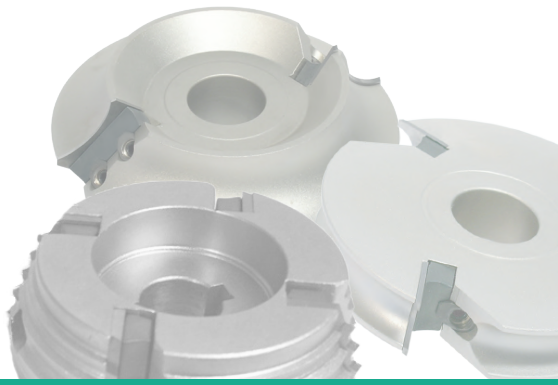

Concave quadrant round-off cutter-head

Fresa a raggiare quarti ti tondo concavi

Radiusfräser für viertelrunde Konkaven

A042

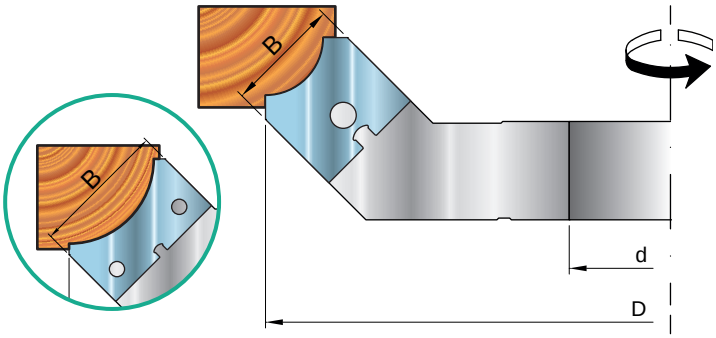

It is possible to have knives between:
R = 8/12/20/30/40 to R = 10/15/25/35/42.5
with 10% more from standard knives price.

Tool tested according to the norm **EN 847-1**

Code	D (mm)	B (mm)	d (mm)	Z	Radius	€
A042 001	140	20	30 (50)	2	8/10	
A042 002	160	30	30 (50)	2	12/15	
A042 003	160	40	30 (50)	2	20/25	
A042 004	190	60	30 (50)	2	30/35	
A042 005	200	60	30 (50)	2	40/42.5	

**All profiles per tool included*

Code	Spare parts		€
J003 001	screw	M8XM6	
J005 001	nut	M8	
J006 002	wedge	19mm	
J007 002	wedge	29mm	
J007 004	wedge	39mm	
J007 006	wedge	59mm	
I022 001	knife	R=8 20X20X2	
I022 002	knife	R=10 20X20X2	
I022 003	knife	R=12 30X25X2	
I022 004	knife	R=15 30X25X2	
I022 005	knife	R=20 40X25X2	
I022 006	knife	R=25 40X25X2	
I022 007	knife	R=30 60X30X2	
I022 008	knife	R=35 60X30X2	
I022 009	knife	R=40 60X30X2	
I022 010	knife	R=42.5 60X30X2	

**The maximum bore size is shown between the brackets.*

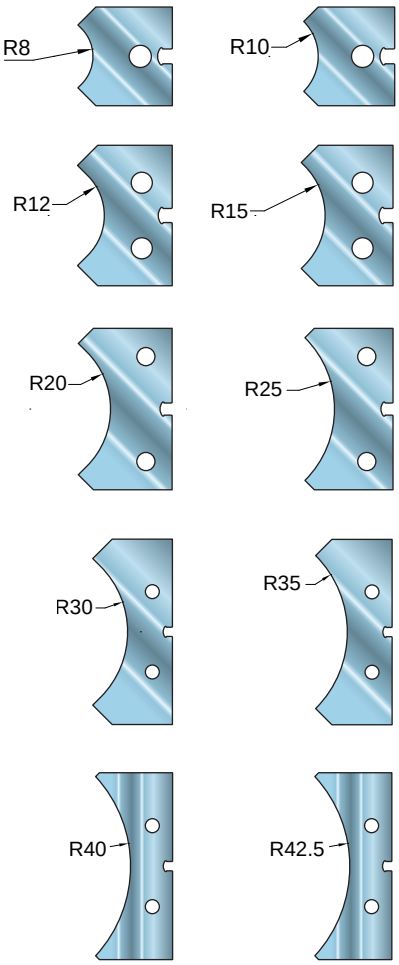

Machine	**Macchina**	**Maschine**
Application	**Applicazioni**	**Einsatzbereich**
Advantages	**Vantaggi**	**Vorteile**

Concave half-roundings cutter-head

Fresa a raggiare mezzo tondo concavo

Radiusfräser für Halbrundungen Konkaven

A043

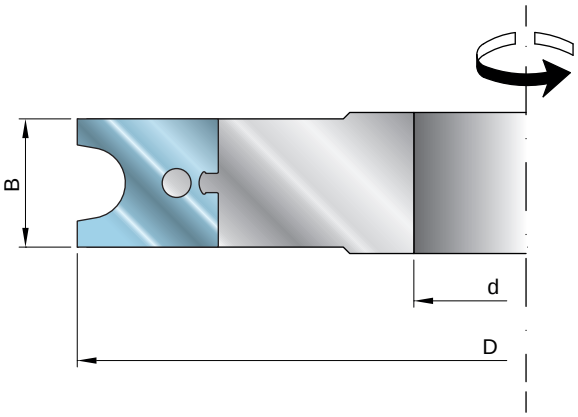

Tool tested according to the norm EN 847-1

R 2/3/4/5/5.5

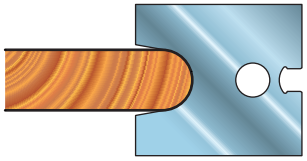

R 6/7/8/9

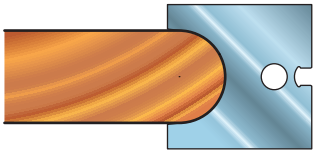

R 10/11/12/15

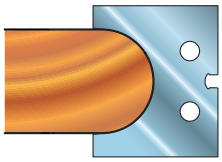

Code	D (mm)	B (mm)	d (mm)	Z	Radius	€
A043 001	140	20	30 (50)	3	2/3/4/5/5.5	
A043 002	140	25	30 (50)	3	6/7/8/9	
A043 003	150	35	30 (50)	3	10/11/12/15	

Code	Spare parts			€
J003 001	screw	M8XM6		
J005 001	nut	M8		
J006 002	wedge	19mm		
J007 001	wedge	24mm		
J007 003	wedge	34mm		
I023 001	knife	R=2 20X20X2		
I023 002	knife	R=3 20X20X2		
I023 003	knife	R=4 20X20X2		
I023 004	knife	R=5 20X20X2		
I023 005	knife	R=5.5 20X20X2		
I023 006	knife	R=6 25X25X2		
I023 007	knife	R=7 25X25X2		
I023 008	knife	R=8 25X25X2		
I023 009	knife	R=9 25X25X2		
I023 010	knife	R=10 35X30X2		
I023 011	knife	R=11 35X30X2		
I023 012	knife	R=12 35X30X2		
I023 013	knife	R=15 35X30X2		

**The maximum bore size is shown between the brackets.*

Machine	**Macchina**	**Maschine**
Application	**Applicazioni**	**Einsatzbereich**
Advantages	**Vantaggi**	**Vorteile**

BANER TOOLS

Concave multi-radius cutter-head

Fresa a raggio multiplo concavo

Konkave Mehrfach-Radius Fräser

A044

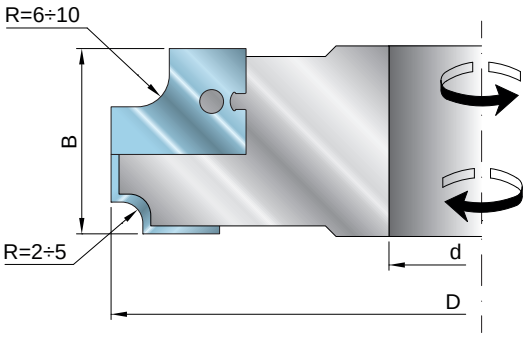

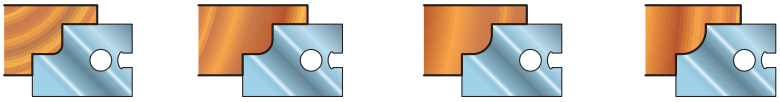

R2 R3 R4 R5

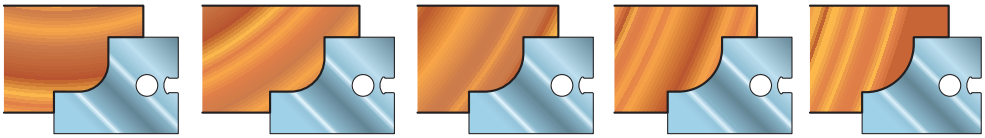

R6 R7 R8 R9 R10

Code	D (mm)	B (mm)	d (mm)	Z	Radius	€
A044 001	140	30	30 (50)	2+2	2÷5/6÷10	

Code	Spare parts			€
J003 001	screw	M8XM6		
J005 001	nut	M8		
J006 001	wedge	14mm		
J006 002	wedge	19mm		
I024 001	knife	R=2	15X25X2	
I024 002	knife	R=3	15X25X2	
I024 003	knife	R=4	15X25X2	
I024 004	knife	R=5	15X25X2	
I024 005	knife	R=6	20X30X2	
I024 006	knife	R=7	20X30X2	
I024 007	knife	R=8	20X30X2	
I024 008	knife	R=9	20X30X2	
I024 009	knife	R=10	20X30X2	

**The maximum bore size is shown between the brackets.*

Machine	Macchina	Maschine
Application	Applicazioni	Einsatzbereich
Advantages	Vantaggi	Vorteile

Convex quadrant round-off cutter-head

Fresa a raggiare quarti di tondo convessi

Radiusfräser für viertelrunde konvexen

A045

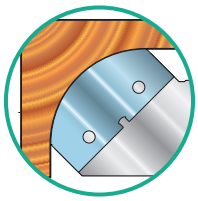

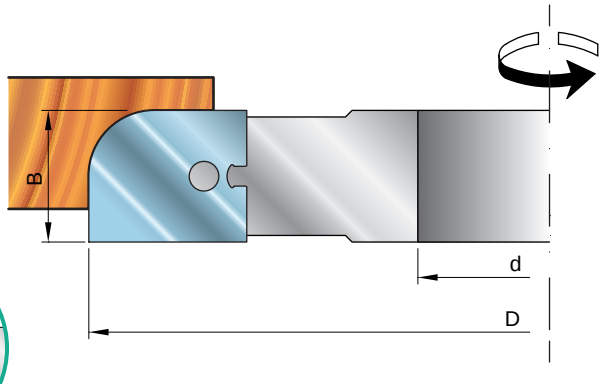

Tool tested according to the norm EN 847-1

Code	D (mm)	B (mm)	d (mm)	Z	Radius	€
A045 001	140	20	30 (50)	2	8/10	
A045 002	160	20	30 (50)	2	12/15	
A045 003	140	30	30 (50)	2	20/25	
A045 004	170	50	30 (50)	2	30/35	
A045 005	190	60	30 (50)	2	40/42.5	

Code	Spare parts		€
J003 001	screw	M8-M6	
J005 001	nut	M8	
J006 002	wedge	19mm	
J007 002	wedge	29mm	
J007 005	wedge	49mm	
J007 006	wedge	59mm	
I025 001	knife	R=8 20X25X2	
I025 002	knife	R=10 20X25X2	
I025 003	knife	R=12 20X30X2	
I025 004	knife	R=15 20X30X2	
I025 005	knife	R=20 30X35X2	
I025 006	knife	R=25 30X35X2	
I025 007	knife	R=30 50X30X2	
I025 008	knife	R=35 50X30X2	
I025 009	knife	R=40 60X30X2	
I025 010	knife	R=42.5 60X30X2	

**The maximum bore size is shown between the brackets.*

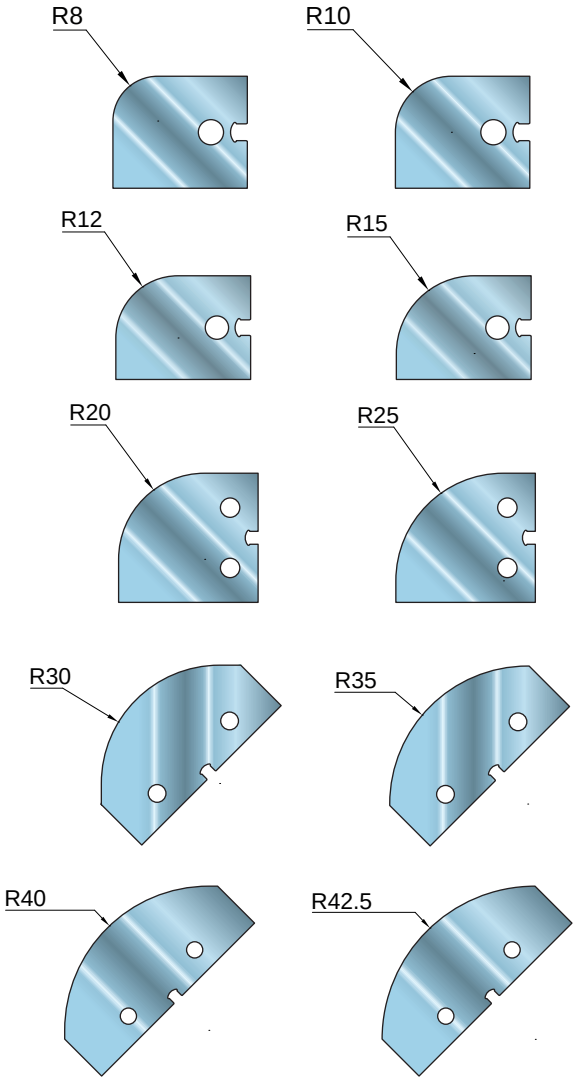

Machine	Macchina	Maschine
Application	Applicazioni	Einsatzbereich
Advantages	Vantaggi	Vorteile

BANER TOOLS

Convex half-roundings cutter-head

Fresa a raggiare mezzo tondo convesso

Konvex Halbrundungen Fräser

A046

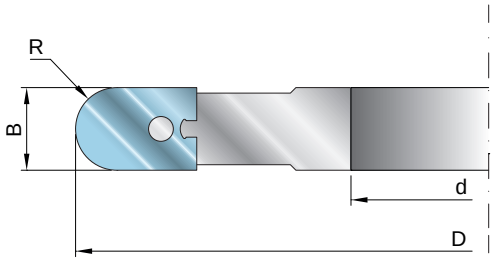

Tool tested according to the norm EN 847-1

Code	D (mm)	B (mm)	d (mm)	Z	R	€
A046 001	150	15	30 (50)	3	7.5	
A046 002	150	20	30 (50)	3	10	
A046 003	150	25	30 (50)	3	12.5	
A046 004	160	30	30 (50)	3	15	
A046 005	160	35	30 (50)	3	17.5	
A046 006	160	40	30 (50)	3	20	
A046 007	180	42	30 (50)	3	21	
A046 008	180	50	30 (50)	3	25	
A046 009	180	60	30 (50)	3	30	

**The maximum bore size is shown between the brackets.*

Code	Spare parts			€
J003 001	screw	M8XM6		
J005 001	nut	M8		
J006 001	wedge	SP 14mm		
J006 002	wedge	SP 19mm		
J007 001	wedge	SP 24mm		
J007 002	wedge	SP 29mm		
J007 003	wedge	SP 34mm		
J007 004	wedge	SP 39mm		
J007 005	wedge	SP 49mm		
J007 006	wedge	SP 59mm		

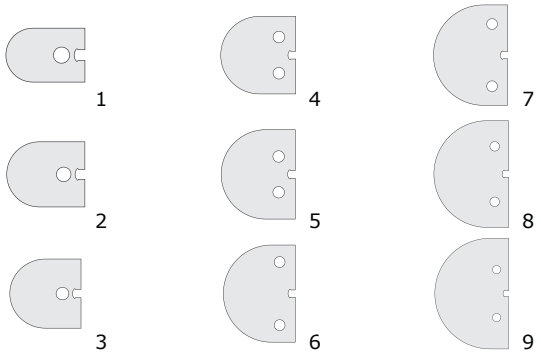

Code	Spare parts	R	Ref.	€
I026 001	15X25X2	7.5	1	
I026 002	20X25X2	10	2	
I026 003	25X30X2	12.5	3	
I026 004	30X30X2	15	4	
I026 005	35X35X2	17.5	5	
I026 006	40X35X2	20	6	
I026 007	42X40X2	21	7	
I026 008	50X40X2	25	8	
I026 009	60X45X2	30	9	

Machine	Macchina	Maschine
Application	Applicazioni	Einsatzbereich
Advantages	Vantaggi	Vorteile

Multi-profile cutter-head

Fresa multi-profilo

Mehrprofil-Messerkopf

A047

Tool tested according to the norm EN 847-1

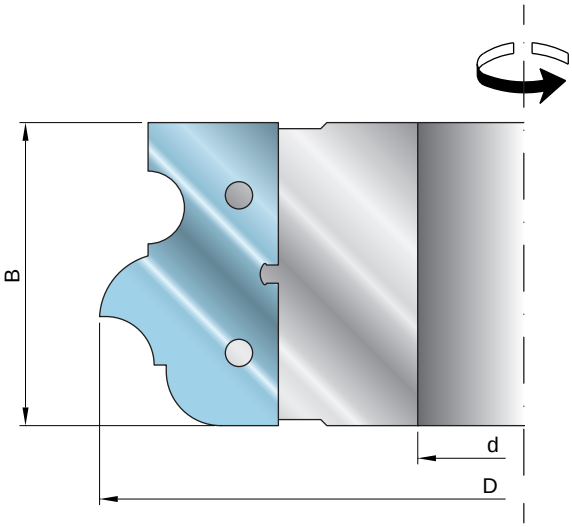

Code	D (mm)	B (mm)	d (mm)	Z	€
A047 001	140	50	30 (40)	3	

The maximum bore size is shown between the brackets.

Code	Spare parts		€
J003 001	screw	M8-M6	
J005 001	nut	M8	
J007 005	wedge	49mm	
I027 001	knife	50X30X2	

Machine	Macchina	Maschine
Application	Applicazioni	Einsatzbereich
Advantages	Vantaggi	Vorteile

BANER TOOLS

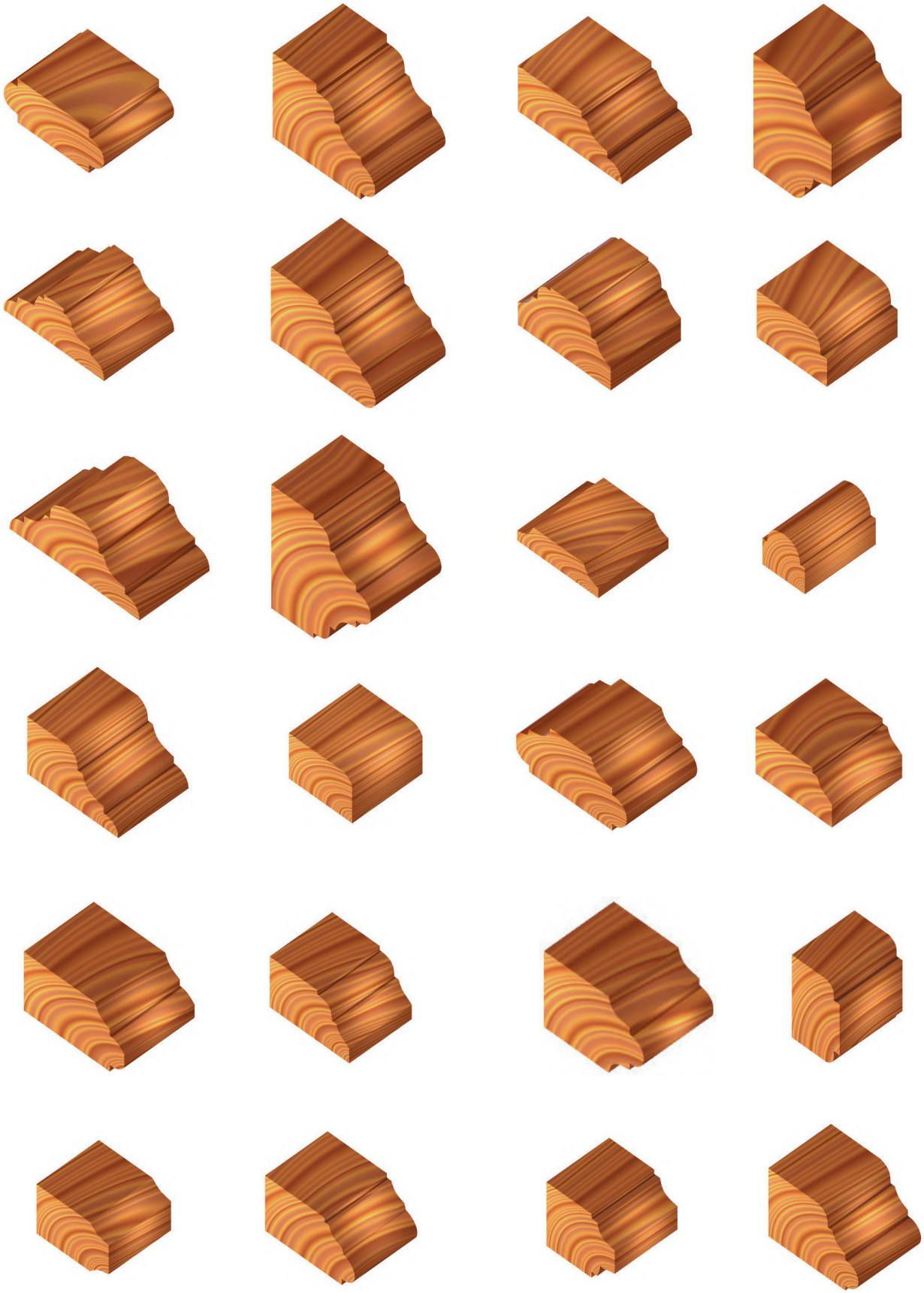

Set of multi-profile cutter-heads

Set di frese multi-profilo

Satz von Mehrprofil-Messerköpfen

A048

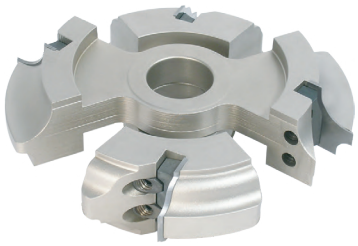

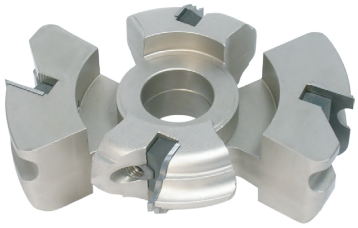

Tool tested according to the norm EN 847-1

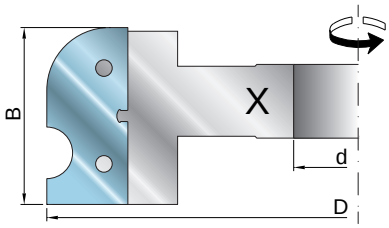

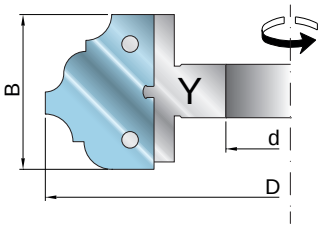

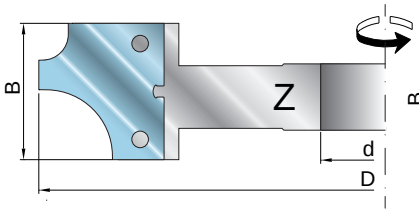

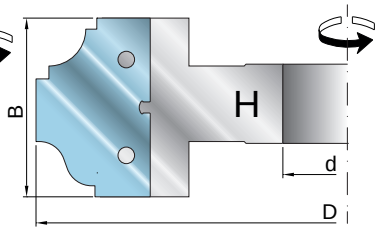

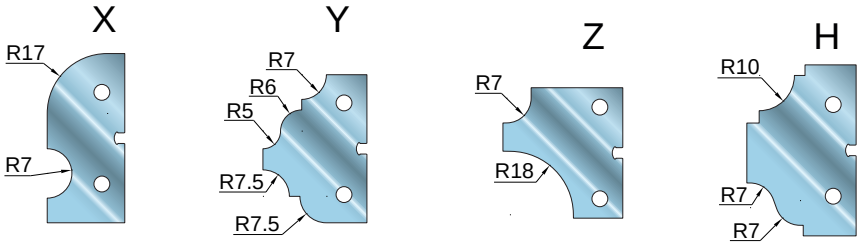

Code	D (mm)	B (mm)	d (mm)	Z	Ref.	€
A048 001	169	49	30 (50)	2	X	
A048 002	133	42	30 (50)	2	Y	
A048 003	188	38.5	30 (50)	2	Z	
A048 004	174	49	30 (50)	2	H	

**The maximum bore size is shown between the brackets.*

Code	Spare parts			€
J003 001	screw	M8-M6		
J005 001	nut	M8		
J007 003	wedge	34mm		
J007 005	wedge	49mm		
I028 001	knife	49X25X2		
I028 002	knife	42X25X2		
I028 003	knife	38.5X30X2		
I028 004	knife	49X30X2		

Machine	Macchina	Maschine
Application	Applicazioni	Einsatzbereich
Advantages	Vantaggi	Vorteile

BANER TOOLS

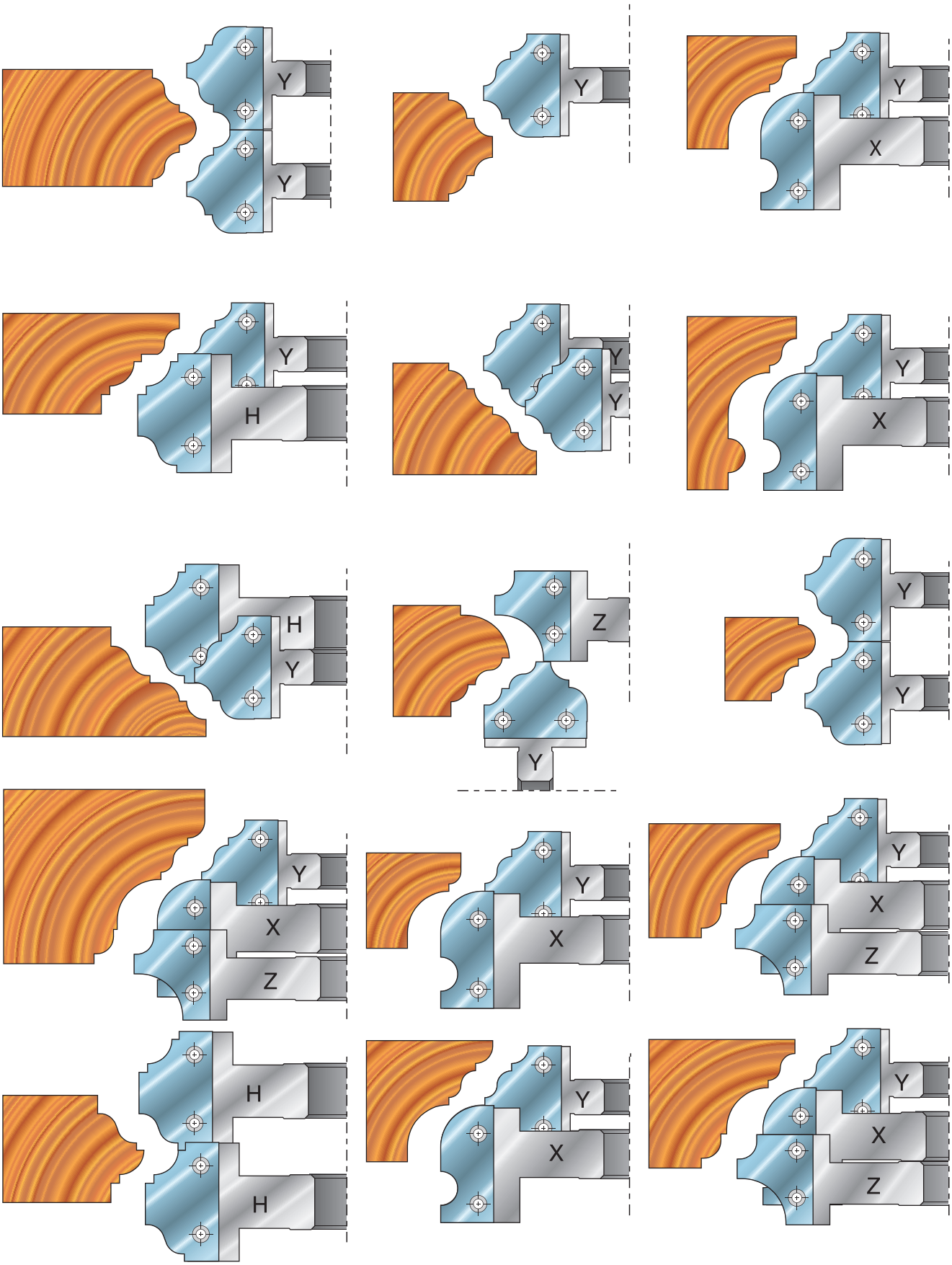
Y
Y
Y
Y
X
Y
H
Y
Y
Y
X
H
Y
Z
Y
Y
Y
X
Z
Y
X
Y
X
Z
H
H
Y
X
Y
X
Z

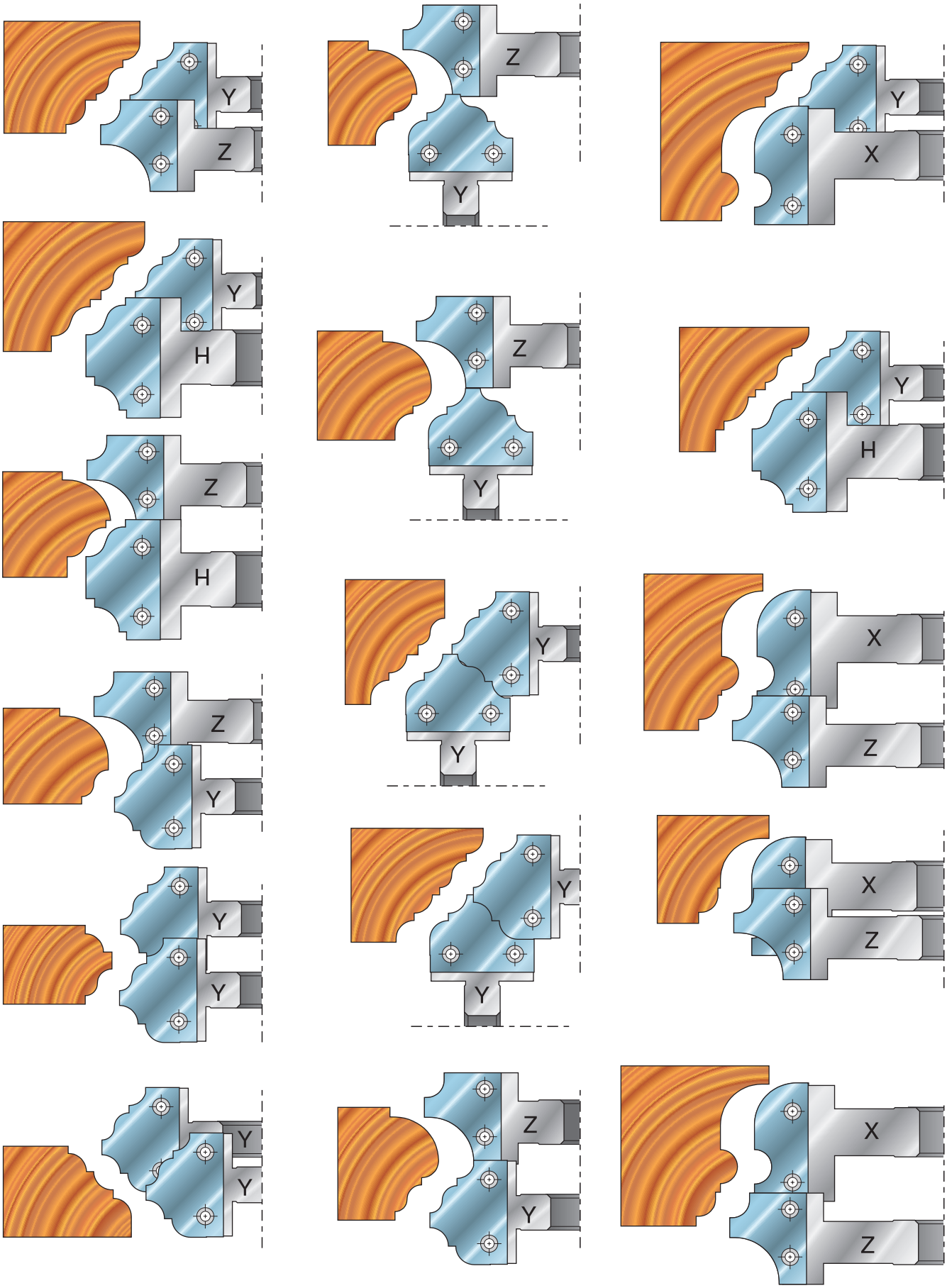

BANER TOOLS

Straight cutter-head for Edge Banding Machines

Fresa dritta per Macchine Bordatrici

Gerade Messerköpfe Für Kantenanleimmaschinen

A049

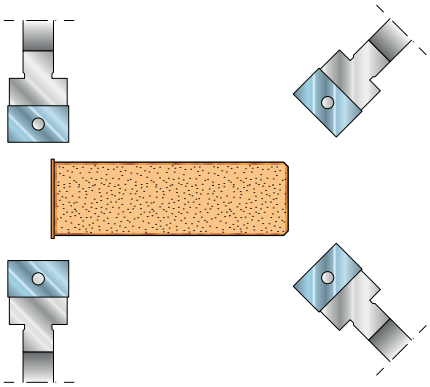

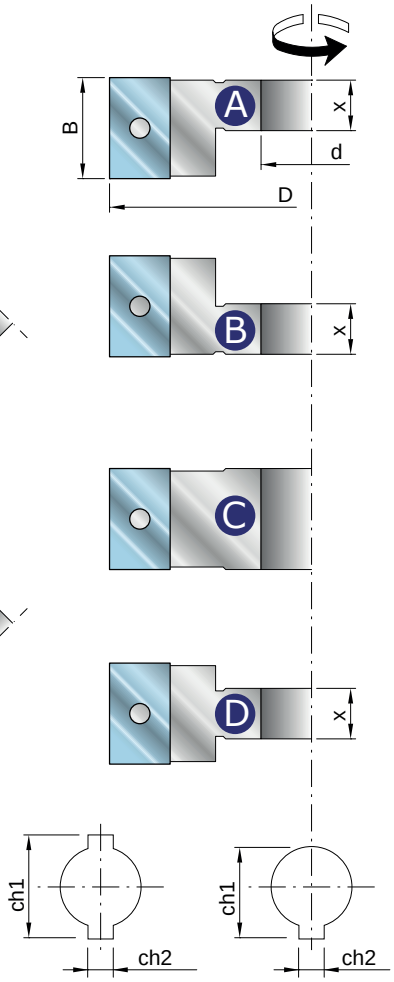

Code	D (mm)	B (mm)	d (mm)	Z	€
A049 001	70	15	12/14/16/20	4	
A049 002	70	20	12/14/16/20	4	
A049 003	70	30	12/14/16/20	4	
A049 004	80	15	12/14/16/20	4	
A049 005	80	20	12/14/16/20	4	
A049 006	80	30	12/14/16/20	4	
A049 007	100	15	12/14/16/20	4	
A049 008	100	20	12/14/16/20	4	
A049 009	100	30	12/14/16/20	4	
A049 010	70	15	12/14/16/20	6	
A049 011	70	20	12/14/16/20	6	
A049 012	70	30	12/14/16/20	6	
A049 013	80	15	12/14/16/20	6	
A049 014	80	20	12/14/16/20	6	
A049 015	80	30	12/14/16/20	6	
A049 016	100	15	12/14/16/20	6	
A049 017	100	20	12/14/16/20	6	
A049 018	100	30	12/14/16/20	6	

**Specify the X dimension, the body type (A-B-C-D), bore and bracket key dimension*

Code	Spare parts		€
J002 001	screw	M6X10	
J008 004	wedge	14.5X9.2X5	
J008 005	wedge	18.5X9.2X5	
I001 005	knife	15X12X1.5	
I001 006	knife	20X12X1.5	
I003 002	knife	30X12X1.5	

Machine	Macchina	Maschine
Application	Applicazioni	Einsatzbereich
Advantages	Vantaggi	Vorteile

Round-off cutter-head for Edge Banding Machines

Fresa raggiata per Macchine Bordatrici

Radiusschneider für Kantenanleimmaschinen

A050

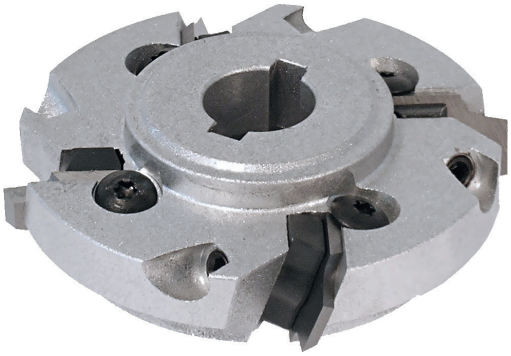

Tool tested according to the norm EN 847-1

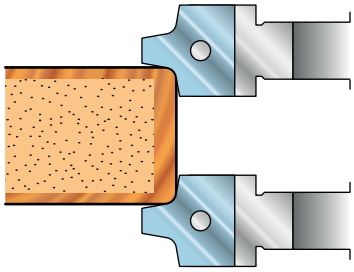

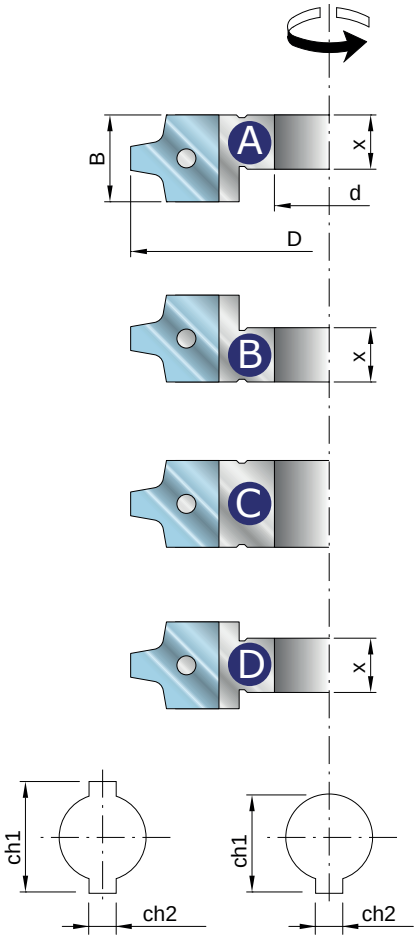

Code	D (mm)	B (mm)	d (mm)	Z	€
A050 001	73	16	12/14/16/20	4	
A050 002	82	16	12/14/16/20	4	
A050 003	82	16	12/14/16/20	6	

**Specify the X dimension, the body type (A-B-C-D), bore and bracket key dimension*

Code	Spare parts				€
J002 001	screw	M6X10			
J008 004	wedge	14.5X9.2X5			
I029 001	knife	16X17.5X2	R=2	A	
I029 002	knife	16X17.5X2	R=3	B	
I029 003	knife	16X17.5X2	R=4	C	
I029 004	knife	16X17.5X2	R=5	D	

Machine	Macchina	Maschine
Application	Applicazioni	Einsatzbereich
Advantages	Vantaggi	Vorteile

BANER TOOLS

Profiled cutterhead for Edge Banding Machines

Fresa sagomata per Macchine Bordatrici

Profilmesserköpfe für Kantenanleimmaschinen

A051

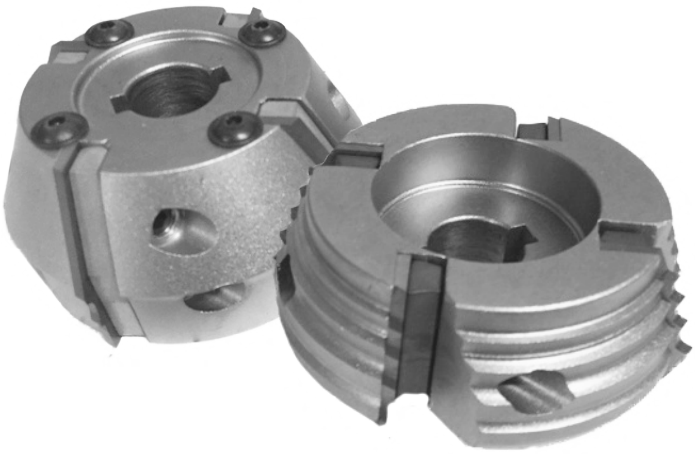

Tool tested according to the norm EN 847-1

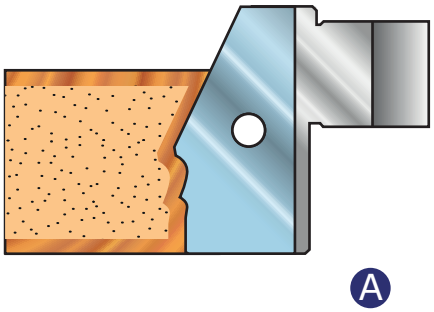

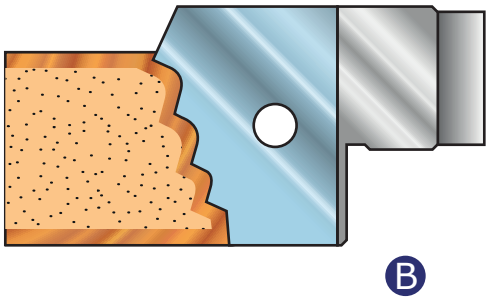

Code	D (mm)	B (mm)	d (mm)	Ref.	€
A051 001	72.19	35	16 + 2CH	A	
A051 002	75.36	25	16 + 2CH	B	

Code	Spare parts		Ref.	€
J002 001	screw	M6X10		
J008 004	wedge	14.5X9.2X5		
J008 005	wedge	18.5X9.2X5		
I030 001	knife	35X20X2	A	
I030 002	knife	25X20X2	B	

Machine	Macchina	Maschine
Application	Applicazioni	Einsatzbereich
Advantages	Vantaggi	Vorteile

A 5

Gluing and finger jointing
Giunzioni e finger joint
Verleimfräser und Keilzinken

A052 pag. 68

- Gluing jointing cutter-head with profiled knives 80x25x2
- Fresa a giunzione con coltelli sagomati 80x25x2
- Verleimfräser mit Profilschneiden 80x25x2

A053 pag. 69

- Gluing jointing cutter-head with profiled knives 50x25x2
- Fresa a giunzione con coltelli sagomati 50x25x2
- Verleimfräser mit Profilschneiden 50x25x2

A054 pag. 70

- Adjustable gluing jointing cutter-head with profiled knives 80/15x25x2
- Fresa a giunzione regolabile con coltelli sagomati 80/15x25x2
- Verstellbar Verleimfräser mit Profilschneiden 80/15x25x2

A055 pag. 71

- Gluing jointing cutter-head with profiled knives 50x25x2
- Fresa a giunzione con coltelli sagomati 50x25x2
- Verstellbar Verleimfräser mit Profilschneiden 50x25x2

A056 pag. 72

- 45° Gluing jointing cutter with profiled knives 60x25x2
- Fresa a giunzione a 45° con coltelli sagomati 60x25x2
- 45° Verleimfräser mit Profilschneiden 60x25x2

A057 pag. 73

- 45° Gluing jointing cutter-head
- Fresa a giunzione a 45°
- 45° Verleimfräser

A058 pag. 74

- Sets of cutter-heads for 45° gluing jointing
- Set di frese per giunzione a 45°
- Fräsersätze für die 45° - Verleimung

A059 pag. 75

- Finger jointing cutter-head
- Fresa per giunzioni finger joint
- Keilzinkenfräser

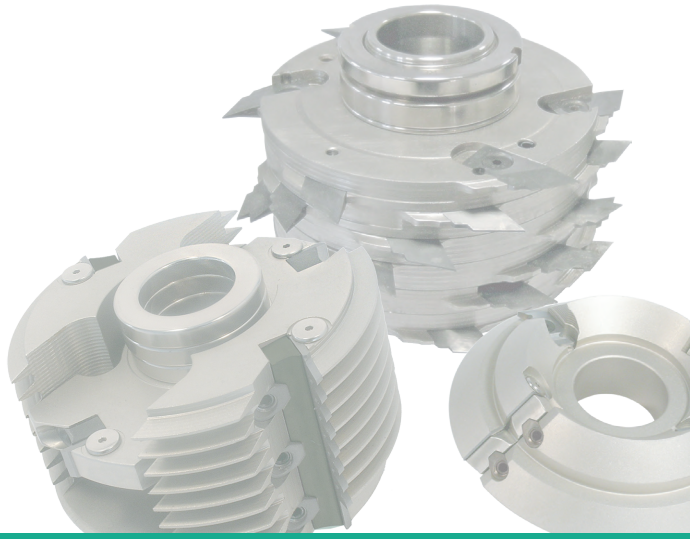

Gluing jointing cutter-head with profiled knives 80x25x2

Fresa a giunzione con coltelli sagomati 80x25x2

Verleimfräser mit Profilschneiden 80x25x2

A052

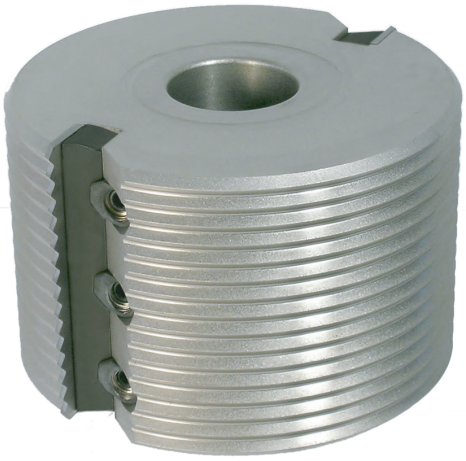

MEC MAN Tool tested according to the norm EN 847-1

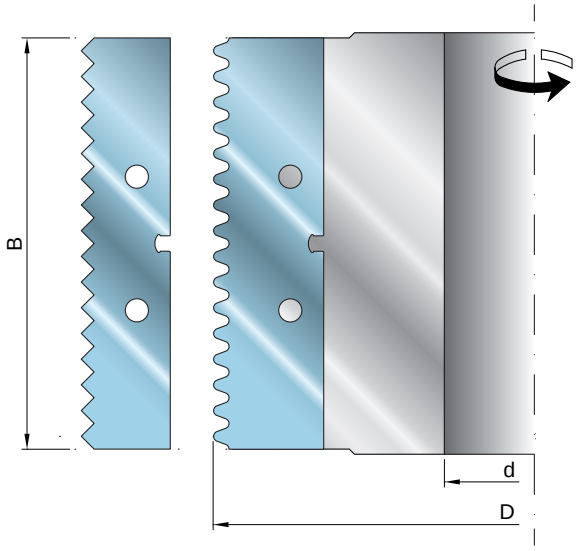

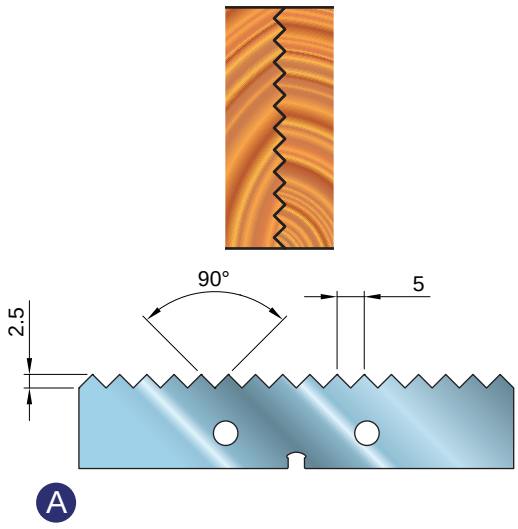

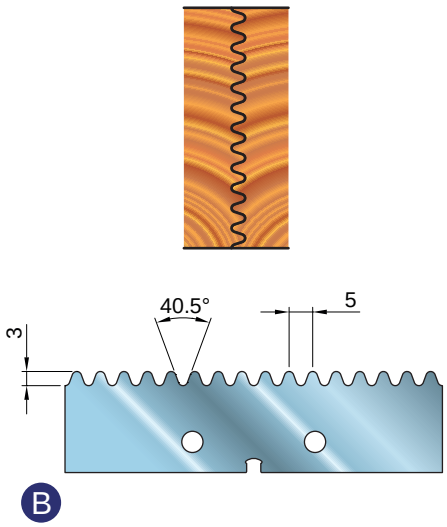

Code	D (mm)	B (mm)	d (mm)	Z	Ref.	€
A052 001	125	80	30 (50)	2	A	
A052 002	140	80	30 (50)	2	A	
A052 003	125	80	30 (50)	2	B	
A052 004	140	80	30 (50)	2	B	

**The maximum bore size is shown between the brackets.*

Code	Spare parts			Ref.	€
J003 001	screw	M8XM6			
J005 001	nut	M8			
J007 007	wedge	79mm			
I031 001	knife	80X25X2		A	
I031 002	knife	80X25X2		B	

Machine	Macchina	Maschine
Application	Applicazioni	Einsatzbereich
Advantages	Vantaggi	Vorteile

Gluing jointing cutter-head with profiled knives 50x25x2

Fresa a giunzione con coltelli sagomati 50x25x2

Verleimfräser mit Profilschneiden 50x25x2

A053

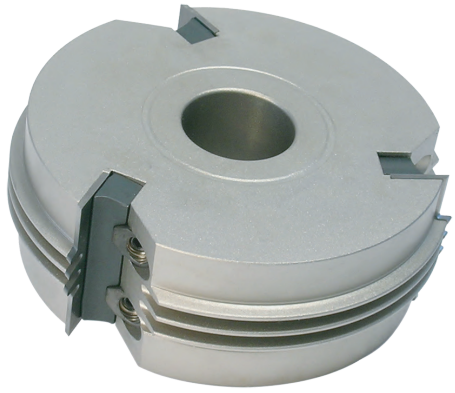

MEC MAN Tool tested according to the norm EN 847-1

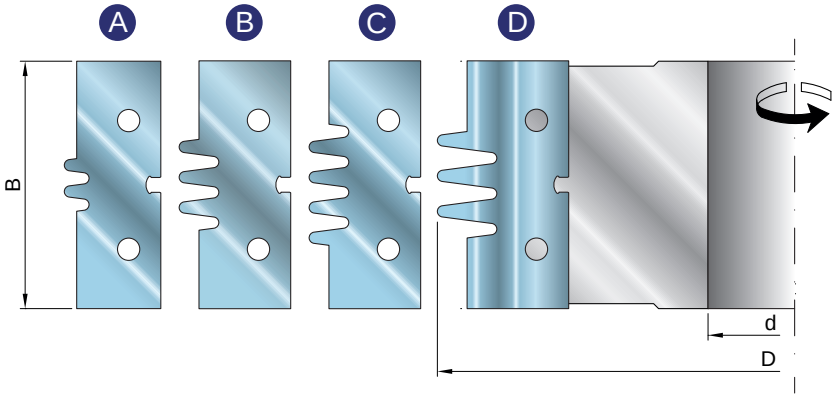

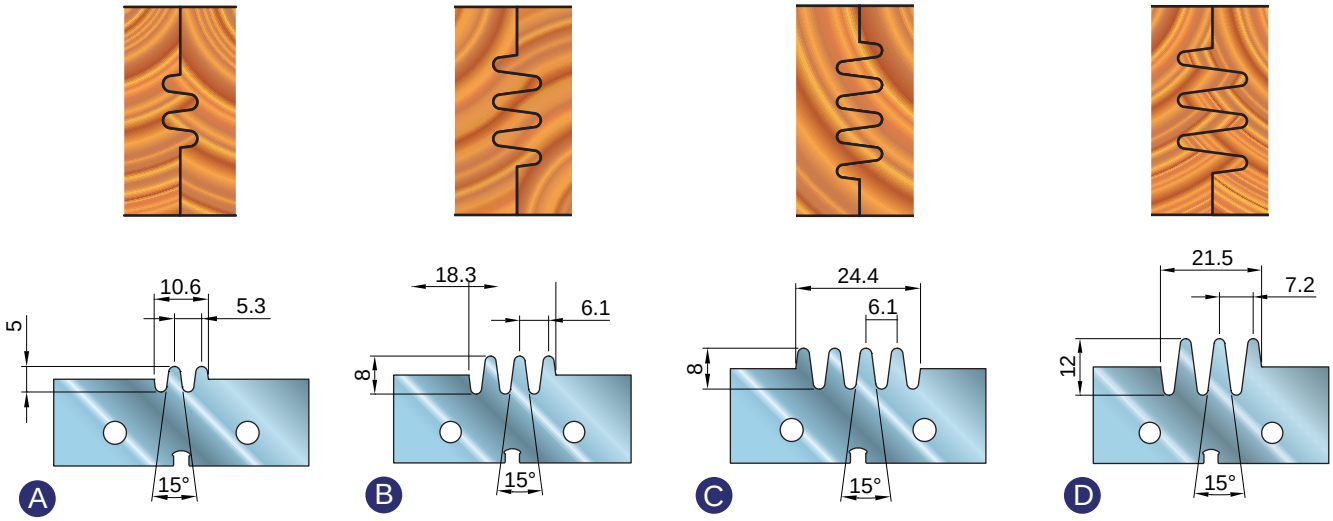

Code	D (mm)	B (mm)	d (mm)	Z	Ref.	€
A053 001	140	50	30 (50)	3	A	
A053 002	140	80	30 (50)	2	B	
A053 003	140	50	30 (50)	3	C	
A053 004	140	80	30 (50)	2	D	

The maximum bore size is shown between the brackets.

Code	Spare parts		Ref.	€
J003 001	screw	M8-M6		
J005 001	nut	M8		
J007 005	wedge	49mm		
I032 001	knife	50X20X2	A	
I032 002	knife	50X25X2	B	
I032 003	knife	50X20X2	C	
I032 004	knife	50X25X2	D	

Machine	Macchina	Maschine
Application	Applicazioni	Einsatzbereich
Advantages	Vantaggi	Vorteile

BANER TOOLS

Adjustable gluing jointing cutter-head with profiled knives 80/15x25x2

Fresa a giunzione regolabile con coltelli sagomati 80/15x25x2

Verstellbar Verleimfräser mit Profilschneiden 80/15x25x2

A054

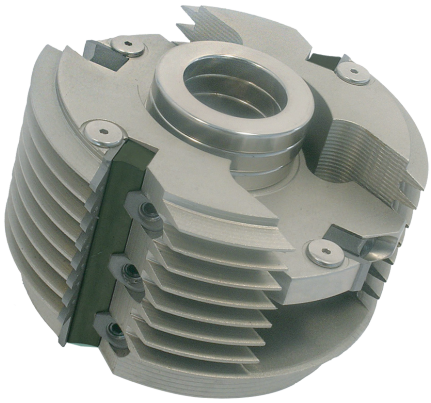

Tool tested according to the norm EN 847-1

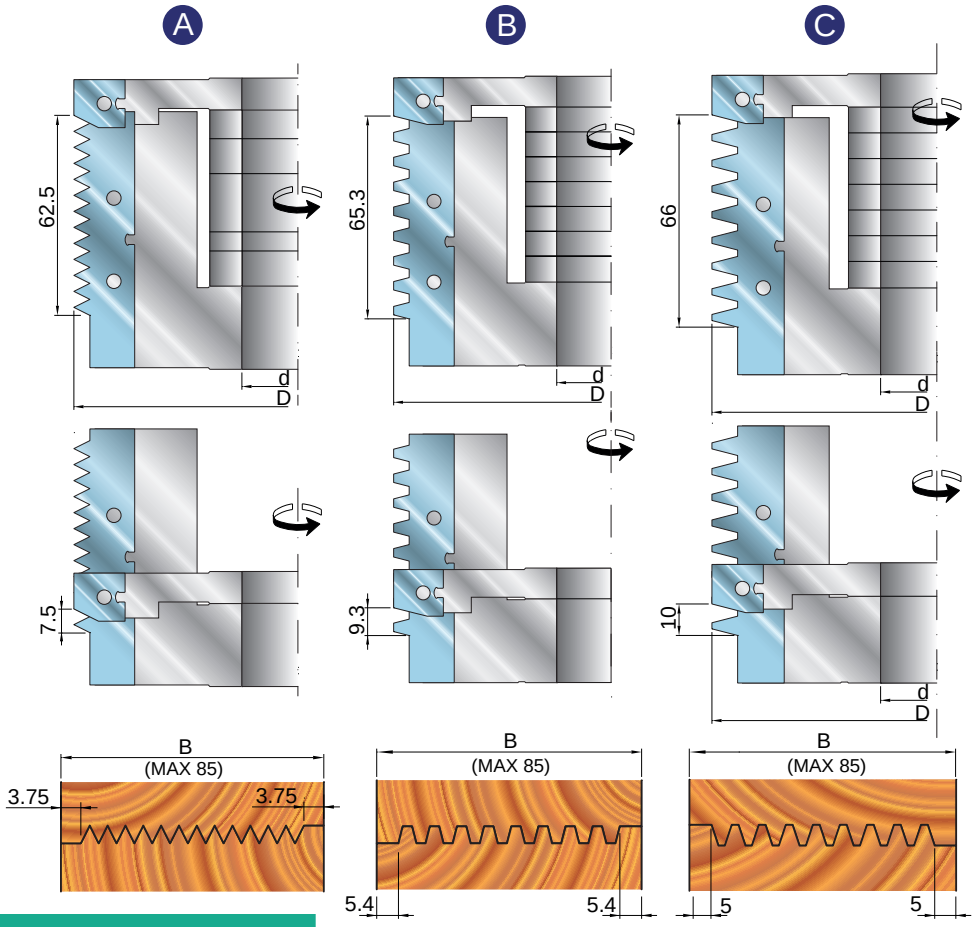

Code	D (mm)	B (mm)	d (mm)	Z	Ref.	€
A054 001	140	15/70 (max80)	30 (50)	2+2	A	
A054 002	140	20/76 (max85)	30 (50)	2+2	B	
A054 003	140	20/77 (max85)	30 (50)	2+2	C	

Code	Spare parts			Ref.	€
J003 001	screw	M8-M6			
J005 001	nut	M8			
J006 001	wedge	14mm			
J007 007	wedge	79mm			
I033 001	knife	15X20X2		A2	
I033 002	knife	80X25X2		A1	
I033 003	knife	15X25X2		B2	
I033 004	knife	80X25X2		B1	
I033 005	knife	15X25X2		C2	
I033 006	knife	80X25X2		C1	

The maximum bore size is shown between the brackets.

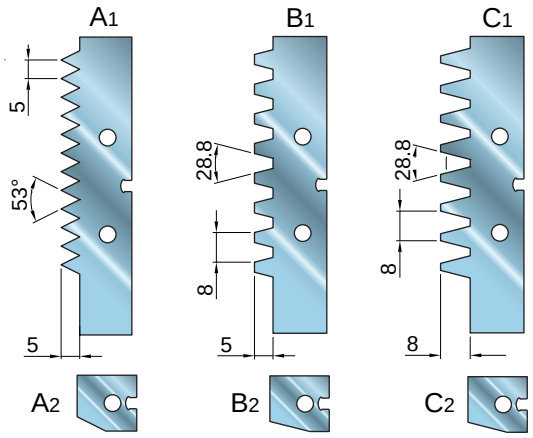

Machine	Macchina	Maschine
Application	Applicazioni	Einsatzbereich
Advantages	Vantaggi	Vorteile

Gluing jointing cutter-head with profiled knives 50x25x2

Fresa a giunzione con coltelli sagomati 50x25x2

Verstellbar Verleimfräser mit Profilschneiden 50x25x2

A055

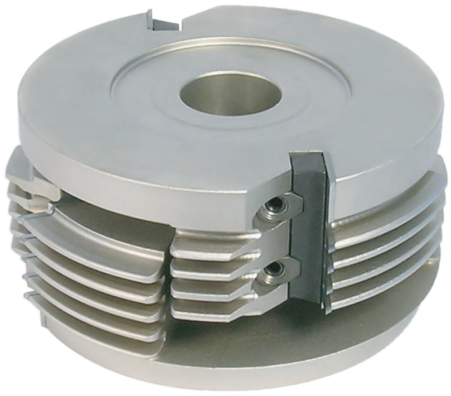

Tool tested according to the norm EN 847-1

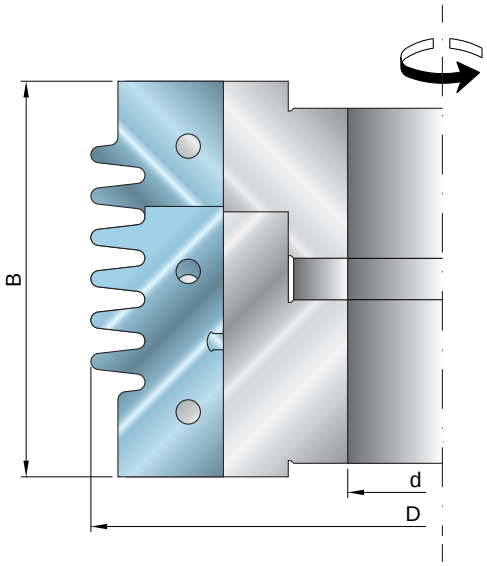

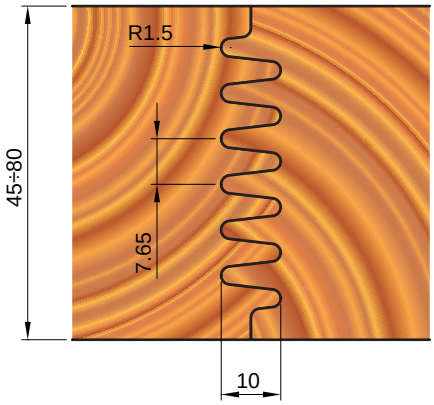

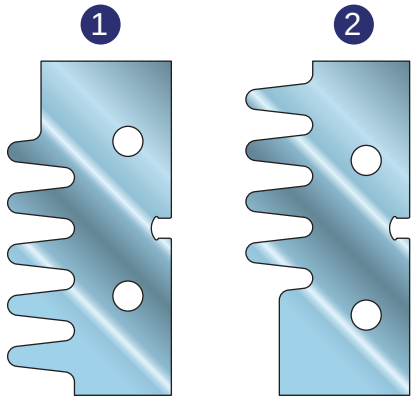

Code	D (mm)	B (mm)	d (mm)	Z	€
A055 001	160	45/80	30 (50)	2	

The maximum bore size is shown between the brackets.

Code	Spare parts		Ref.	€
J003 001	screw	M8-M6		
J005 001	nut	M8		
J007 005	wedge	49mm		
I034 001	knife	50X25X2	1	
I034 002	knife	50X25X2	2	

Machine	Macchina	Maschine
Application	Applicazioni	Einsatzbereich
Advantages	Vantaggi	Vorteile

BANER TOOLS

45° Gluing jointing cutter-head with profiled knives 60x25x2

Fresa a giunzione a 45° con coltelli sagomati 60x25x2

45° Verleimfräser mit Profilschneiden 60x25x2

A056

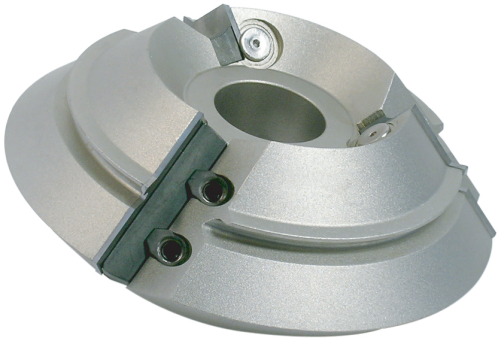

Tool tested according to the norm EN 847-1

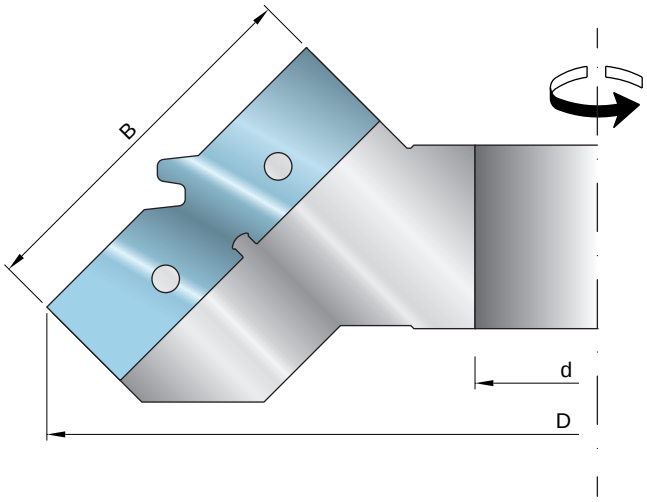

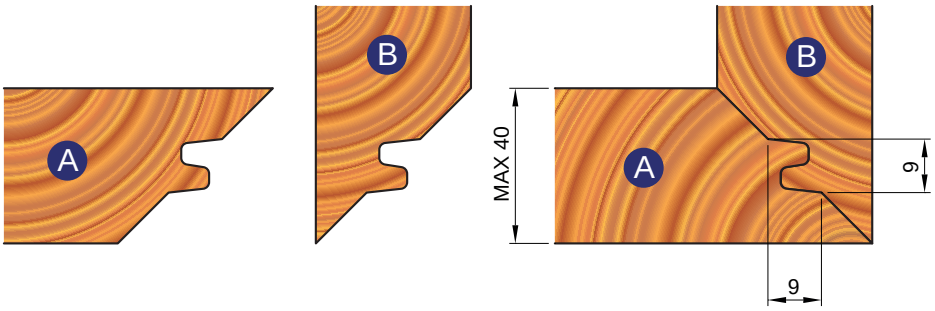

Code	D (mm)	B (mm)	d (mm)	Z	€
A056 001	180	60	30 (40)	3	
A056 002	200	60	50	3	

The maximum bore size is shown between the brackets.

Code	Spare parts			€
J003 001	screw	M8-M6		
J005 001	nut	M8		
J007 006	wedge	59mm		
I035 001	knife	60X25X2		

Machine	Macchina	Maschine
Application	Applicazioni	Einsatzbereich
Advantages	Vantaggi	Vorteile

45° Gluing jointing cutter-head

Fresa a giunzione a 45°

45° Verleimfräser

A057

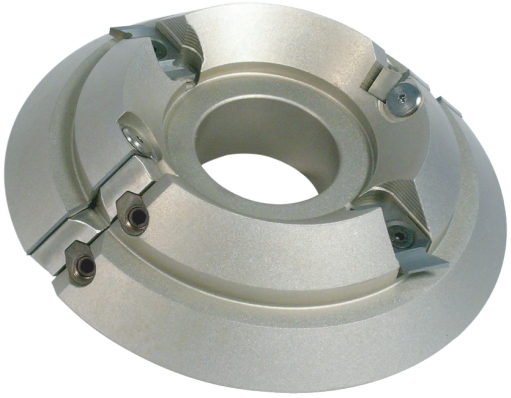

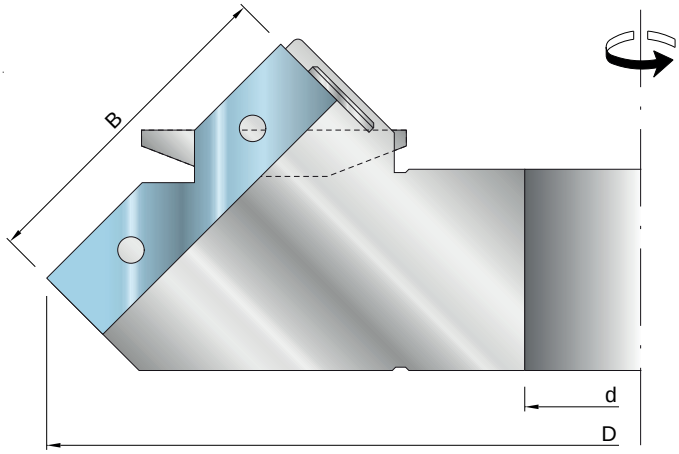

Tool tested according to the norm EN 847-1

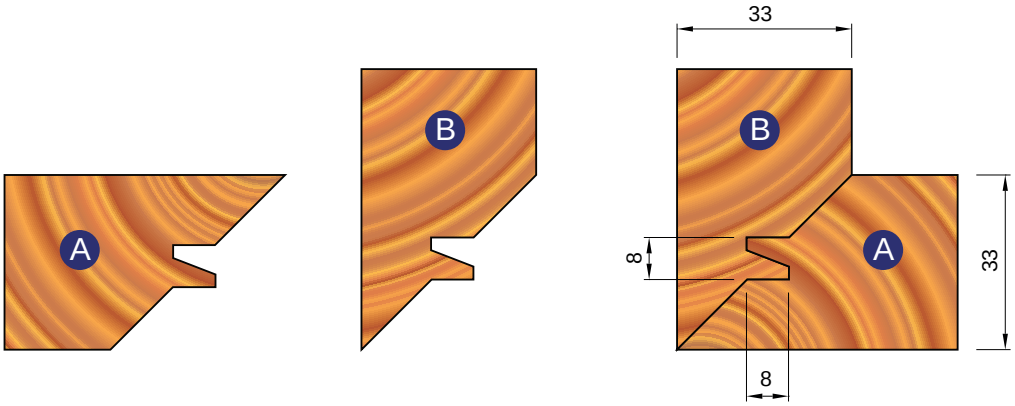

Code	D (mm)	B (mm)	d (mm)	Z	€
A057 001	180	50	30 (50)	2	

**The maximum bore size is shown between the brackets.*

Code	Spare parts		€
J014 001	screw	M6X14	
I016 009	insert		
J003 001	screw	M8-M6	
J005 001	nut	M8	
J007 005	wedge	49mm	
I036 001	knife	50X12X1.5	

Machine	Macchina	Maschine
Application	Applicazioni	Einsatzbereich
Advantages	Vantaggi	Vorteile

BANER TOOLS

Sets of cutter-heads for 45° gluing jointing

Set di frese per giunzione a 45°

Fräsersätze für die 45°-Verleimung

A058

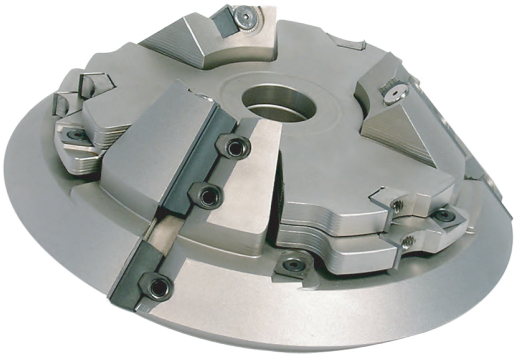

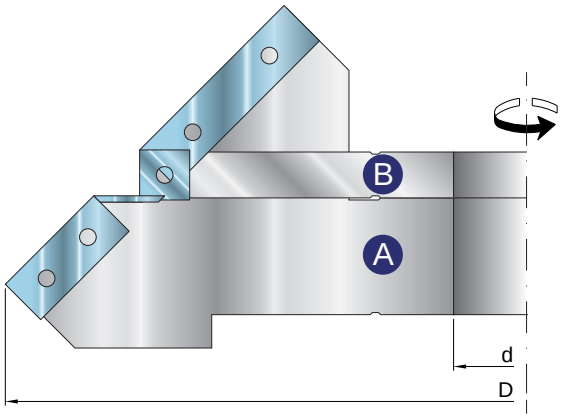

Tool tested according to the norm EN 847-1

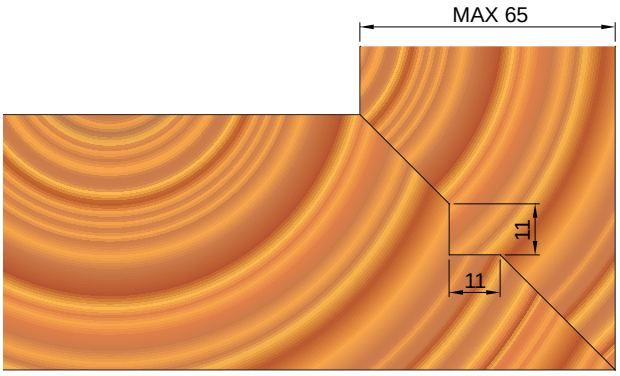

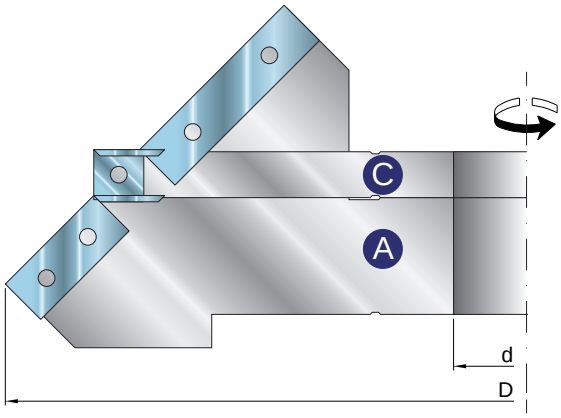

Code	D (mm)	B (mm)	d (mm)	Z	Ref.	€
A058 001	250	45	30 (50)	3	A/B/C	

The maximum bore size is shown between the brackets.

Code	Spare parts			Ref.	€
J009 002	screw	M5X7		A/C	
I007 002	knife	14X14X2		A/C	
J003 001	screw	M8-M6		A/B/C	
J008 002	wedge	10.8mm		B/C	
J007 002	wedge	29mm		A	
J007 005	wedge	49mm		A	
I001 004	knife	12X12X1.5		B/C	
I003 002	knife	30X12X1.5		A	
I003 004	knife	50X12X1.5		A	

Machine	Macchina	Maschine
Application	Applicazioni	Einsatzbereich
Advantages	Vantaggi	Vorteile

Finger jointing cutter-head

Fresa per giunzioni finger joint

Keilzinkenfräser

A059

Tool tested according to the norm EN 847-1

Can be programmed to the desidered thickness (fig.1)

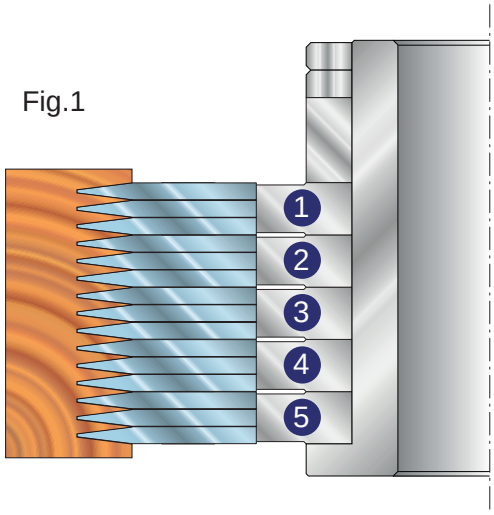

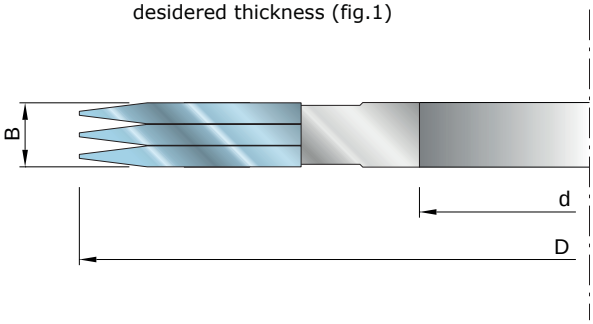

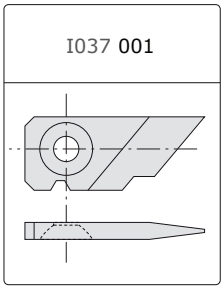

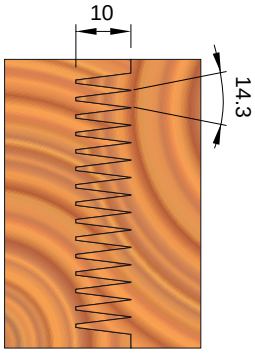

Code	D (mm)	B (mm)	d (mm)	Z	€
A059 001	180	11.3	30 (60)	9	

*The maximum bore size is shown between the brackets.

Code	Spare parts		€
I037 001	knife	37.5X16X3.68	

Machine	Macchina	Maschine
Application	Applicazioni	Einsatzbereich
Advantages	Vantaggi	Vorteile

BANER TOOLS

A 6

Tongue and Grooving | Parchetti e Perline | Nut-und Feder

A060 pag. 78

- Cutter-heads for panelling and flooring - tongue and groove Z2
- Frese per parchetti e perline Z2
- Nut-und Federwerkzeuge Z2

A061 pag. 81

- Set of cutter-heads for panelling and flooring - Tongue and groove Z4
- Gruppi per parchetti e perline Z4
- Sätze Nut-und Federwerkzeuge Z4

A060

MEC MAN Tool tested according to the norm EN 847-1

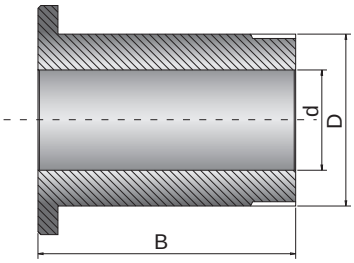

Code	D (mm)	B (mm)	d (mm)	Z	V	I	LS	Ref.	€
A060 001	140	15	30 (50)	2	2			1	
A060 002	140	15	30 (50)	2	2			2	
A060 003	127	12	30 (50)	2			2	3	
A060 004	155	20	30 (50)	2		2		4	
A060 005	155	20	30 (50)	2		2		5	
A060 006	139	15	30 (50)	2	2			6	
A060 007	175	15	30 (50)	2	2			7	
A060 008	155	20	30 (50)	2		2		8	
A060 009	160	15	30 (50)	2	2			9	
A060 010	155	20	30 (50)	2		2		10	
A060 011	164	20	30 (50)	2		2		11	
A060 012	149	15	30 (50)	2	2			12	
A060 013	165	20	30 (50)	2		2		13	
A060 014	164	20	30 (50)	2		2		14	
A060 015	154	12	30 (50)	2				15	
A060 016	154	12	30 (50)	2				16	

**The maximum bore size is shown between the brackets.*

Code	D (mm)	d (mm)	B	€
J025 017	50	35	95	
J026 017	60	35	95	
J025 029	50	40	95	
J026 041	60	45	95	
J026 053	60	50	95	

Code RH	Code LH	D (mm)	d (mm)	S (mm)	€
J029 001	J029 002	70	50	10	
J029 003	J029 004	80	60	6	

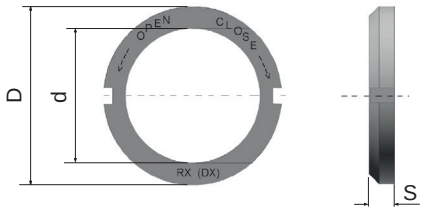

Code	Spare parts			Ref.	€
J009 002	screw	M5X7		1-2-6-7-9-12	
I007 002	spur	14X14X2		1-2-6-7-9-12	
J009 005	screw	M5X12		3-4-5-8-10-11-13-14	
I016 002	insert	4mm		4-5-8-10-11-13-14	
I014 001	insert	45°		1-6	
J003 001	screw	M8-M6		All	
J005 001	nut	M8		1-2-4-5-6-7-8-9 -10-11-12-13-14	
J008 002	wedge	10.8mm		3-15-16	
J006 001	wedge	14mm		1-2-6-7-9-12	
J006 002	wedge	19mm		4-5-8-10-11-13-14	
I001 004	knife	12X12X1.5		3-15-16	
I001 005	knife	15X12X1.5		1-2-6-7-9-12	
I001 006	knife	20X12X1.5		4-5-8-10-11-13-14	

Machine	Macchina	Maschine
Application	Applicazioni	Einsatzbereich
Advantages	Vantaggi	Vorteile

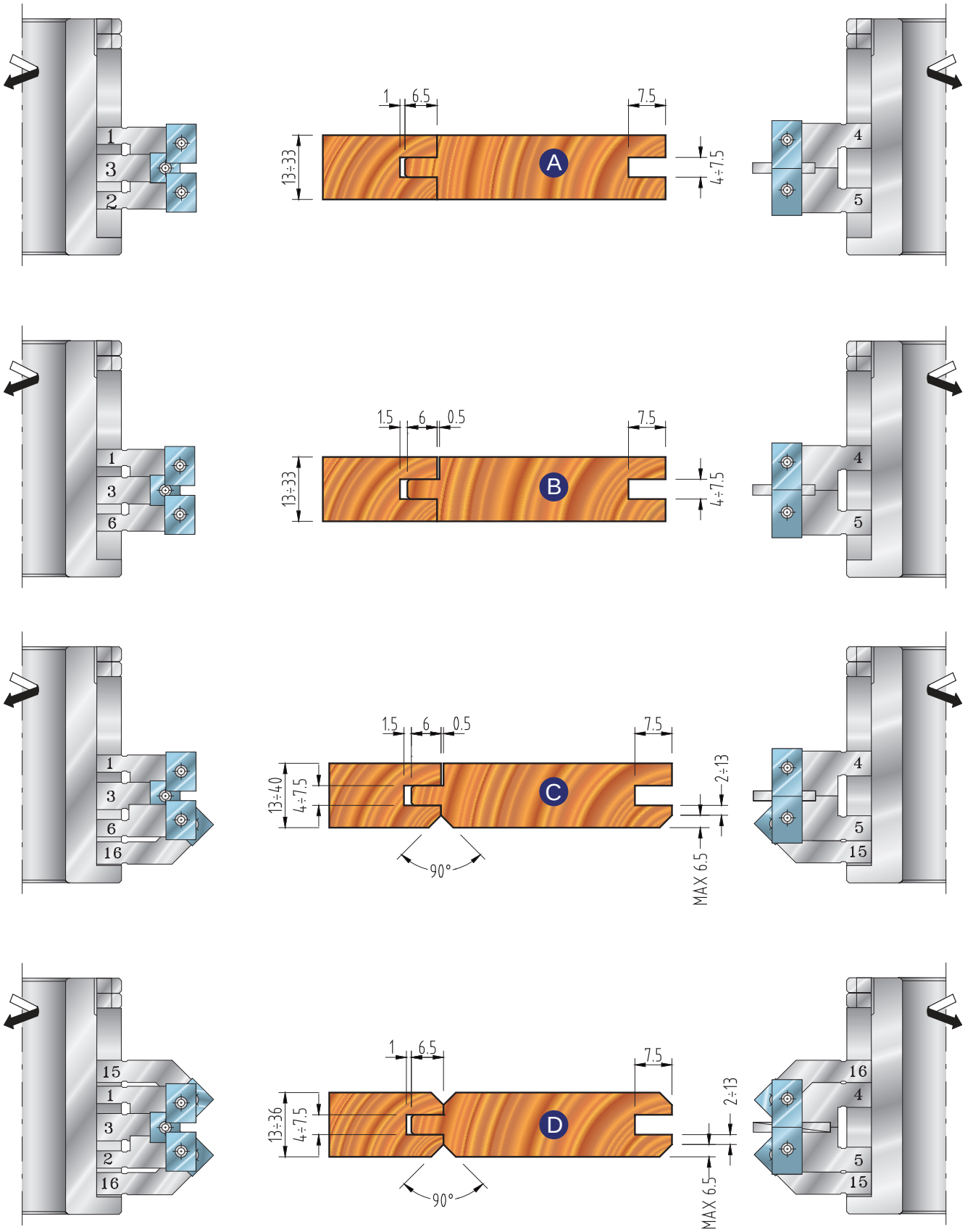
1
3
2
1
6.5
7.5
13÷33
A
4÷7.5
4
5
1
3
6
1.5
6
0.5
7.5
13÷33
B
4÷7.5
4
5
1
3
6
16
1.5
6
0.5
7.5
13÷40
4÷7.5
C
2÷13
90°
MAX 6.5
4
5
15
15
1
3
2
16
1
6.5
7.5
13÷36
4÷7.5
D
2÷13
90°
MAX 6.5
16
4
5
15

BANER TOOLS

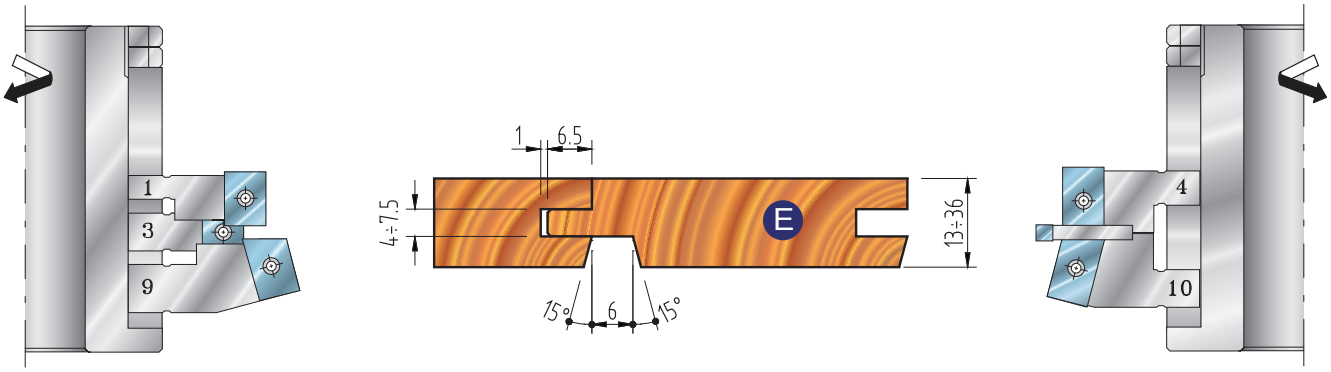
1
3
9
1
6.5
4÷7.5
E
13÷36
15°
6
15°
4
10

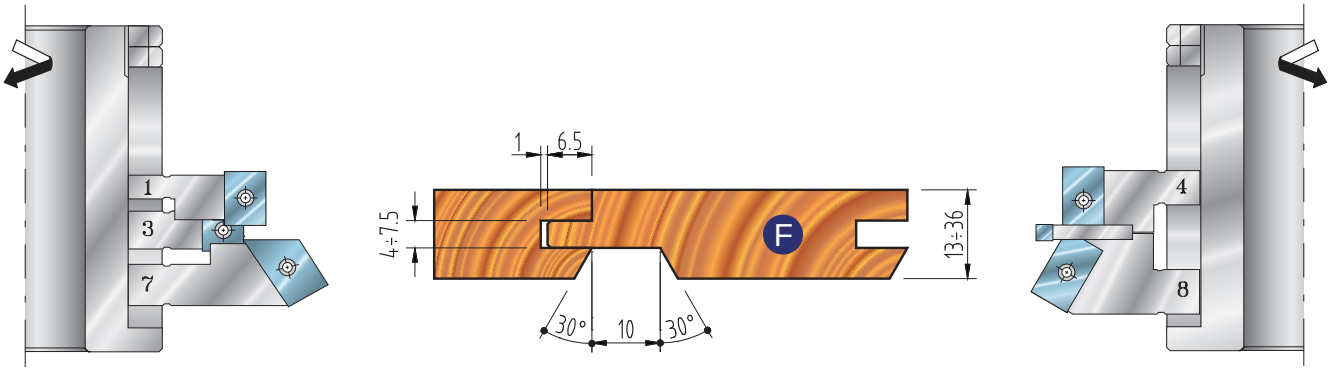
1
3
7
1
6.5
4÷7.5
F
13÷36
30°
10
30°
4
8

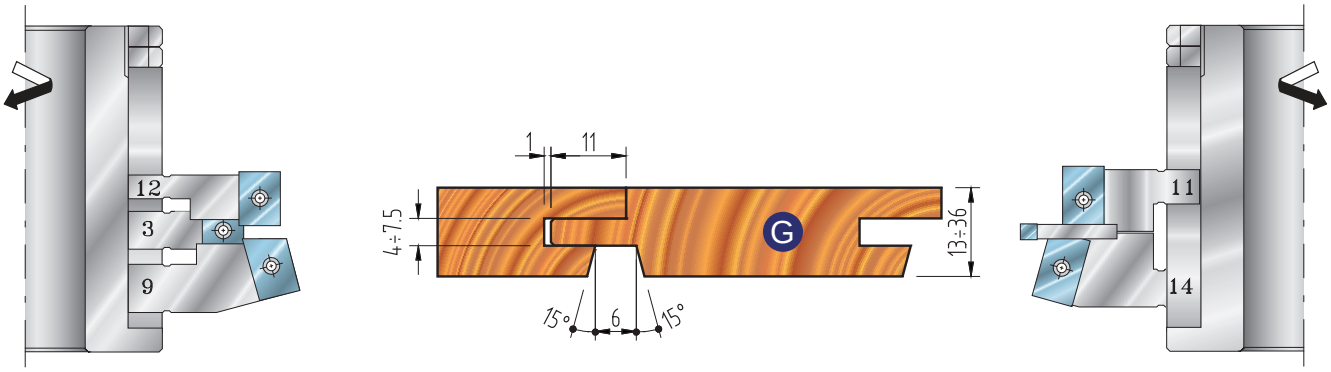
12
3
9
1
11
4÷7.5
G
13÷36
15°
6
15°
11
14

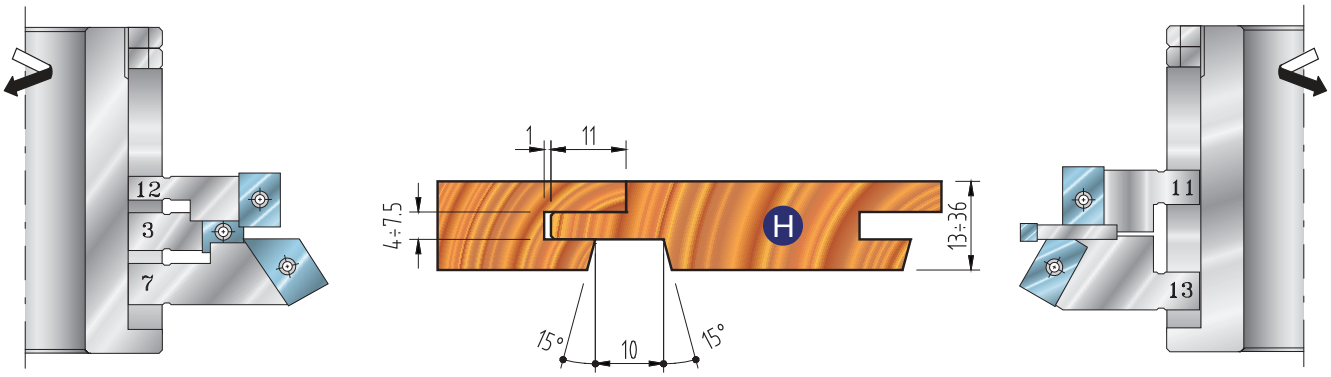
12
3
7
1
11
4÷7.5
H
13÷36
15°
10
15°
11
13

A061

Tool tested according to the norm EN 847-1

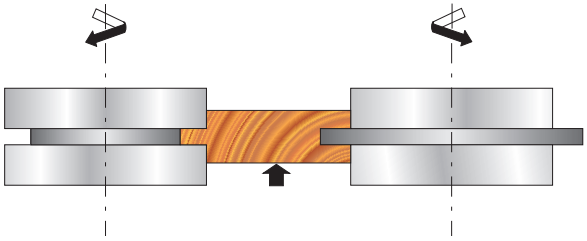

Code	D (mm)	d (mm)	Z	Ref.	€
A061 001	155	30 (40)	4	A	
A061 002	155	30 (40)	4	B	
A061 003	155	30 (40)	4	C	
A061 004	155	30 (40)	4	D	
A061 005	160	30 (40)	4	E	
A061 006	175.5	30 (40)	4	F	
A061 007	164	30 (40)	4	G	
A061 008	175.5	30 (40)	4	H	

**For the spare parts, refer to the article TFM303K*
**The maximum bore size is shown between the brackets.*

Machine	Macchina	Maschine
Application	Applicazioni	Einsatzbereich
Advantages	Vantaggi	Vorteile

BANER TOOLS

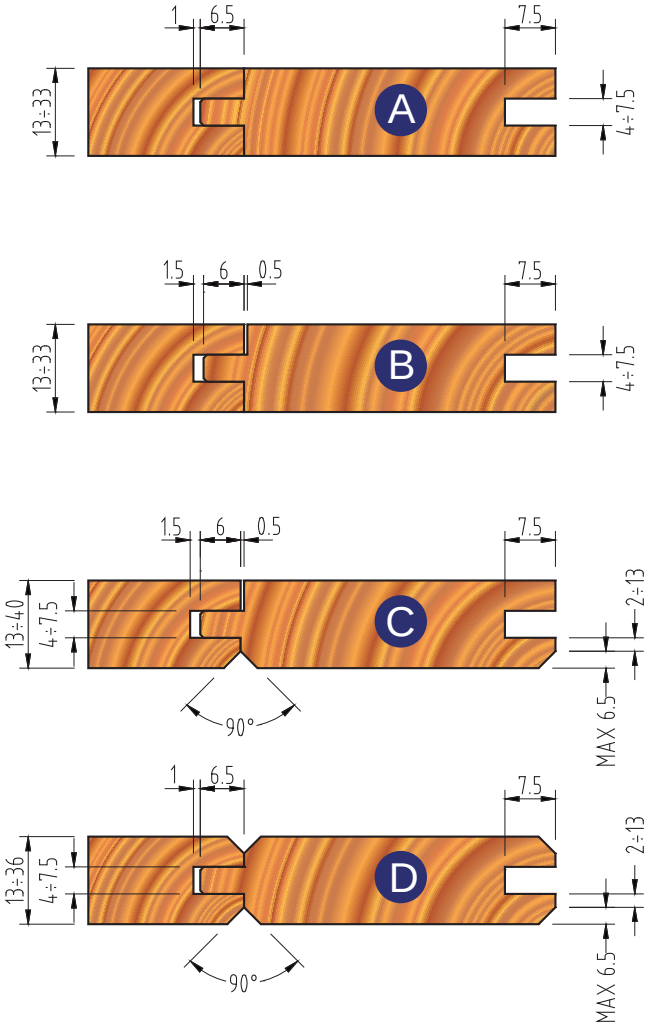
A
1
6.5
7.5
13÷33
4÷7.5
B
1.5
6
0.5
7.5
13÷33
4÷7.5
C
1.5
6
0.5
7.5
13÷40
4÷7.5
2÷13
MAX 6.5
90°
D
1
6.5
7.5
13÷36
4÷7.5
2÷13
MAX 6.5
90°

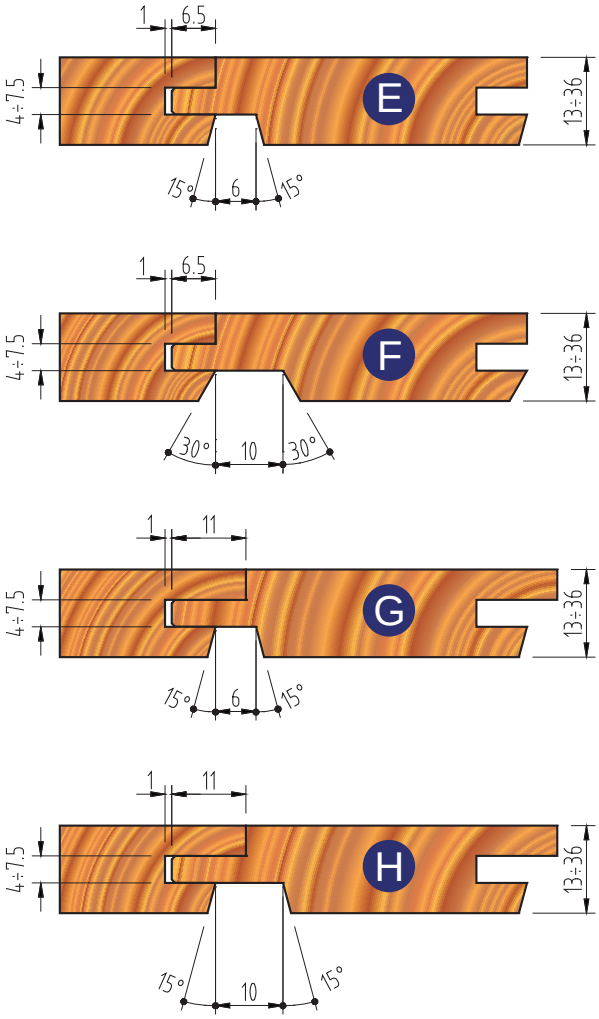
E
1
6.5
4÷7.5
13÷36
15°
6
15°
F
1
6.5
4÷7.5
13÷36
30°
10
30°
G
1
11
4÷7.5
13÷36
15°
6
15°
H
1
11
4÷7.5
13÷36
15°
10
15°

A 7

Door Machining, Panel Raising
Lavorazioni Porte e Piattabande
Türenbearbeitung, Abplatten

A062 pag. 84

Cutter-head for door frames

Fresa per telai di porte

Messerkopf für Türzargen

A063 pag. 85

Door frames profiled cutter-heads Pro

Frese per profili di telai e mostrine di porte Pro

Türzargen Profilierte Messerköpfe Pro

A064 pag. 86

Door frames profiled cutter-heads Plus

Frese per profili di telai e mostrine di porte Plus

Türzargen Profilierte Messerköpfe Plus

A065 pag. 87

Combi-Door profile cutter-head sets for profile and counter profile

Gruppi sagomati per porte per profilo e controproilo

Kombi Türenprofilfräsersätze von Profil und Konterprofil

A066 pag. 88

Sets of Cutter-heads for doors with inserted ashlar

Gruppi sagomati per porte con bugna a infilare

Fräsersätze für Türen mit eingesetztem Quaderstein

A067 pag.89

Sets of cutter-heads for doors with separated ashlar

Gruppi sagomati per porte con bugna riportata

Fräsersätze für Türen mit getrenntem Quaderstein

A068 pag. 91

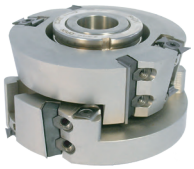

Sets of adjustable cutter-heads for external door squaring

Gruppi regolabili per squadratura esterna di porte

Einstellbare Gruppen für die externe Türquadrierung

A069 pag. 92

Set of cutter-heads for sliding doors

Gruppi per porte scorrevoli

Fräsersatz für Schiebetüren

A070 pag. 93

Multi-profile panel raising cutter-head Pro

Fresa per piattapanda multi-profilo Pro

Mehrprofil-Abplattfräser Pro

A071 pag. 96

Multi-profile panel raising cutter-head Plus

Fresa per piattapanda multi-profilo Plus

Mehrprofil-Abplattfräser Plus

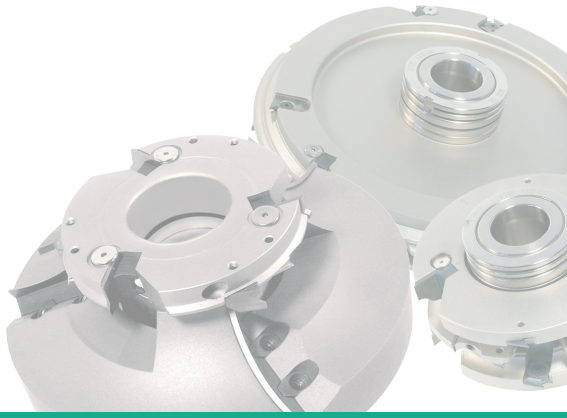

Cutter-head for door frames

Fresa per telai di porte

Messerkopf für Türzargen

A062

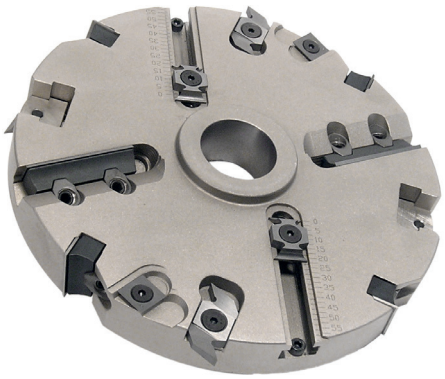

Tool tested according to the norm EN 847-1

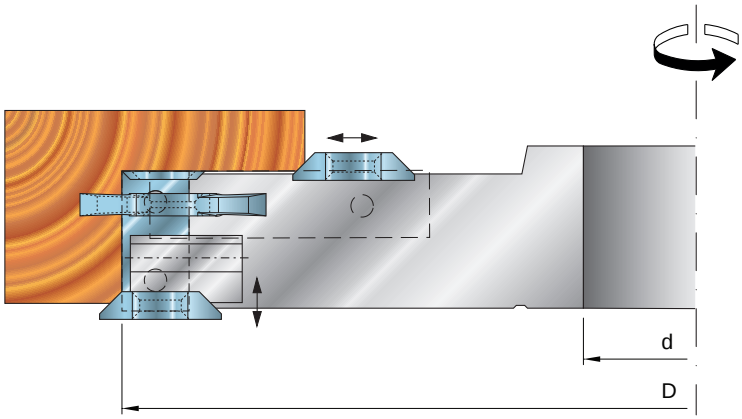

Code	D (mm)	B (mm)	d (mm)	Z	€
A062 001	200	25	30 (40)	4	

The maximum bore size is shown between the brackets

Code	Spare parts		€
J009 002	screw	M5X7	
I007 002	spur	14X14X2	
J009 005	screw	M5X12	
I015 001	insert	RGT1.5/2/3	
I016 002	insert	4mm	
J001 001	screw	M5X10	
J015 001	mobile support RH/LH		
J014 001	screw	M6X14	
I014 001	insert	14°	
J003 001	screw	M8-M6	
J005 001	nut	M8	
J007 001	wedge	24mm	
J007 005	wedge	49mm	
I001 007	knife	25X12X1.5	
I003 004	knife	25X12X1.5	

All spare parts included

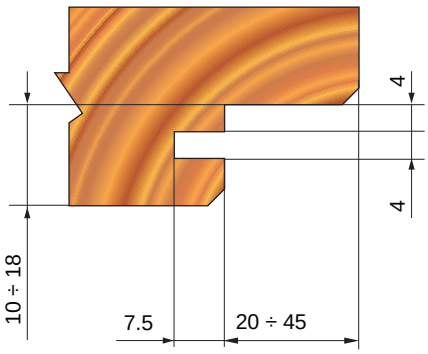

Machine	Macchina	Maschine
Application	Applicazioni	Einsatzbereich
Advantages	Vantaggi	Vorteile

A063

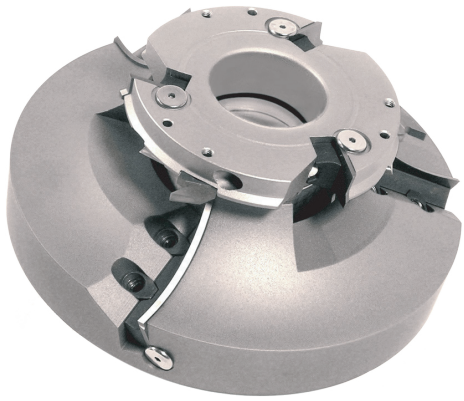

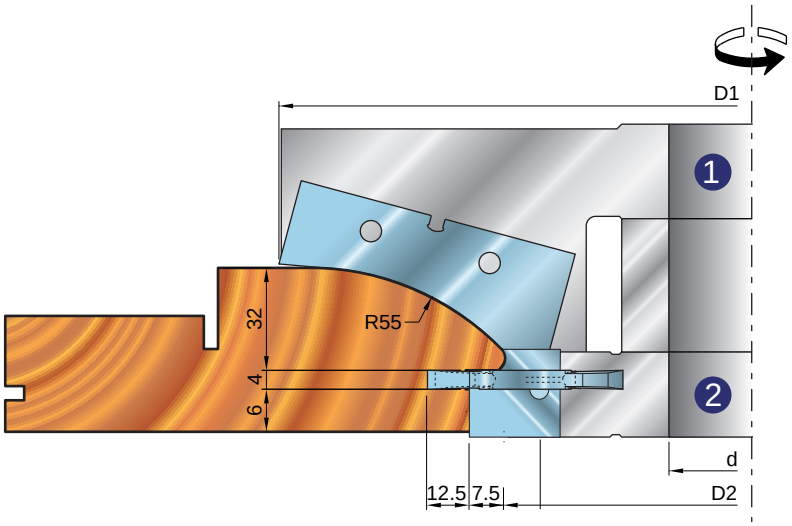

MEC MAN Tool tested according to the norm EN 847-1

Code	D1 (mm)	D2 (mm)	d (mm)	Z	Ref.	€
A063 001	200	-	30 (40)	3	1	
A063 002	-	105	30 (40)	3	2	

The maximum bore size is shown between the brackets

Code	Spare parts			Ref.	€
J009 005	screw	M5X12		2	
I016 002	insert	4mm		2	
J003 001	screw	M8-M6		1/2	
J005 001	nut	M8		1/2	
J006 002	wedge	19mm		2	
J007 006	wedge	59mm		1	
I038 001	knife	20X25X2		2	
I038 002	knife	60X35X2		1	

*One profile to be chosen

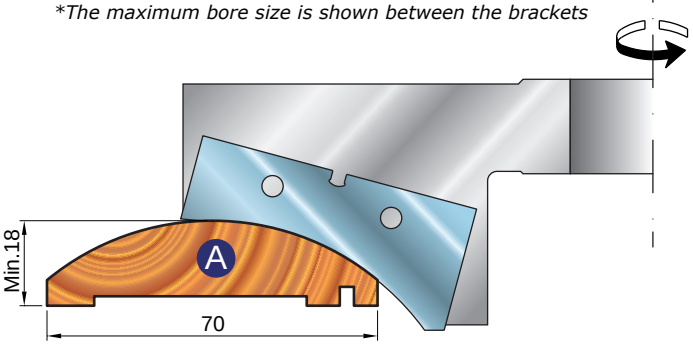

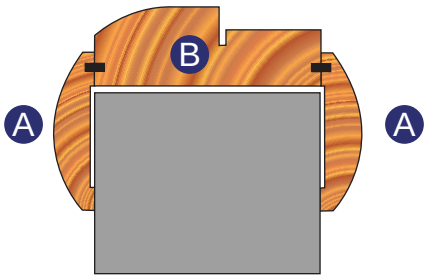

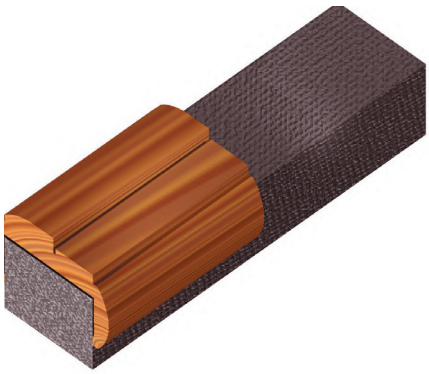

Machine	Macchina	Maschine
Application	Applicazioni	Einsatzbereich
Advantages	Vantaggi	Vorteile

BANER TOOLS

A064

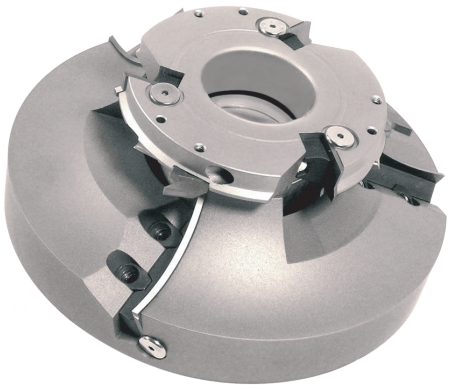

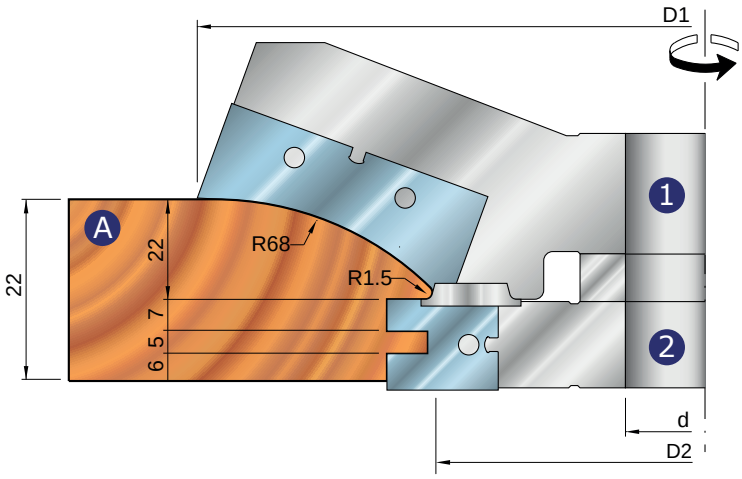

MEC MAN Tool tested according to the norm EN 847-1

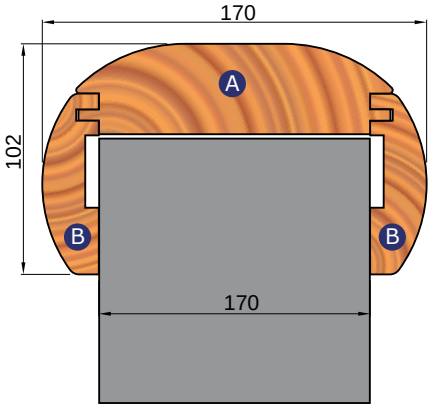

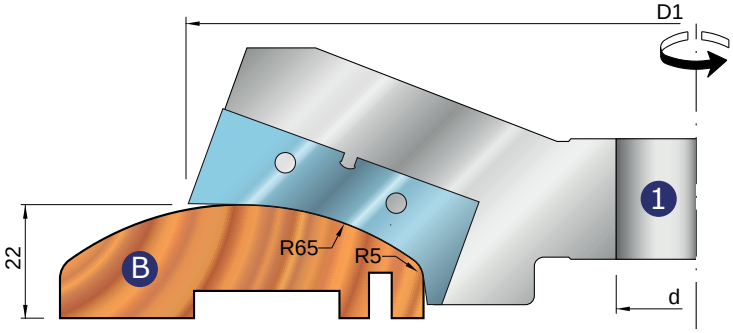

Code	D1 (mm)	D2 (mm)	d (mm)	Z	Ref.	€
A064 001	200	-	30 (40)	3	1	
A064 002	-	105	30 (40)	3	2	

The maximum bore size is shown between the brackets

Code		Spare parts		Ref.	€
J009 005	screw	M5X12		F2	
I015 001	insert	4mm		F2	
J003 001	screw	M8-M6		F1-F2	
J005 001	nut	M8		F1-F2	
J006 002	wedge	19mm		F2	
I039 001	knife	20X25X2		F2	
J007 006	wedge	59mm		F1	
I039 002	knife	60X30X2		F1	
I039 003	knife	60X30X2		F1	

One profile to be chosen

Machine	Macchina	Maschine
Application	Applicazioni	Einsatzbereich
Advantages	Vantaggi	Vorteile

A065

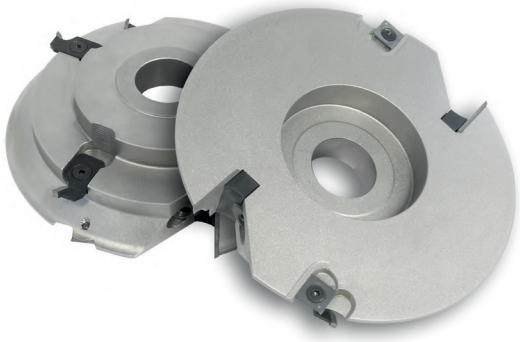

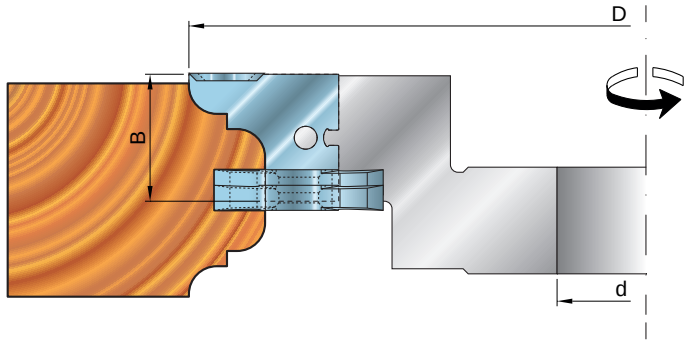

MEC MAN Tool tested according to the norm EN 847-1

Code	D (mm)	B (mm)	d (mm)	Z	€
A065 001	180	25	30 (40)	2	

The maximum bore size is shown between the brackets

Code	Spare parts		€
J009 002	screw	M5X7	
I007 002	spur	14X14X2	
J009 005	screw	M5X12	
I016 002	insert	4mm	
J003 001	screw	M8-M6	
J005 001	nut	M8	
J007 001	wedge	24mm	
I040 001	knife	25X30X2	
I040 002	knife	25X30X2	
I040 003	knife	25X30X2	
I040 004	knife	25X30X2	

All profiles included

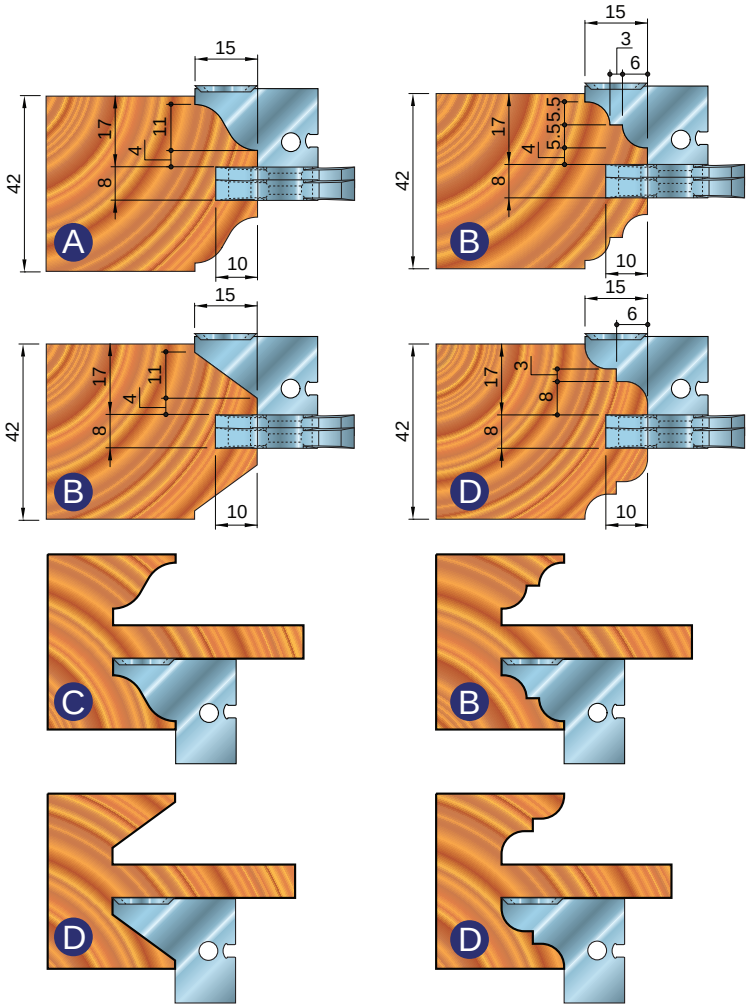

Machine	Macchina	Maschine
Application	Applicazioni	Einsatzbereich
Advantages	Vantaggi	Vorteile

BANER TOOLS

Sets of cutter-heads for doors with inserted ashlar

Gruppi sagomati per porte con bugna a infilare

Fräsersätze für Türen mit eingesetztem Quaderstein

A066

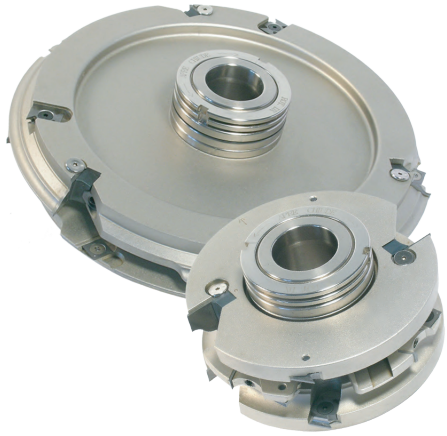

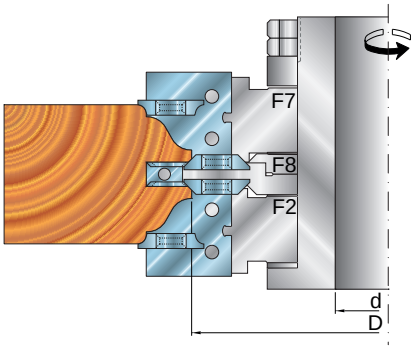

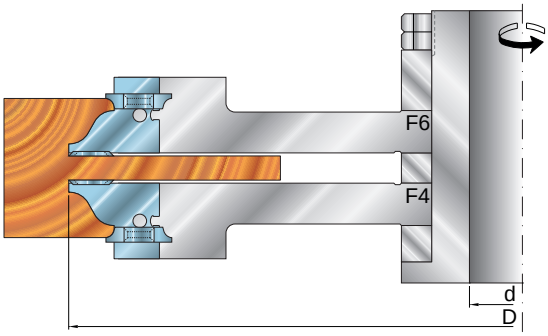

MEC MAN Tool tested according to the norm EN 847-1

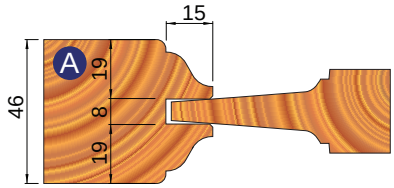

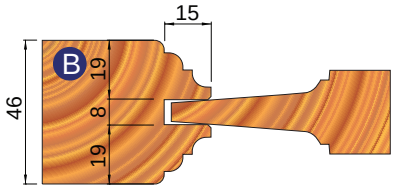

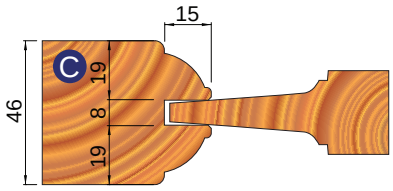

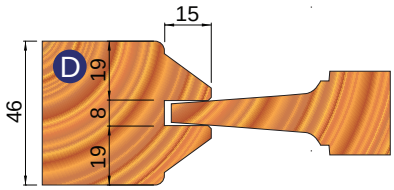

Code	D (mm)	d (mm)	Z	Ref.	€
A066 001	130	30 (40)	2	F2/F7/F8	
A066 002	304	30 (40)	3	F4/F6	

**The maximum bore size is shown between the brackets*

Code	Spare parts		Ref.	€
J009 002	screw	M5X7	F4-F6-F8	
I007 002	spur	14X14X2	F4-F6-F8	
J009 005	screw	M5X12	F2-F4-F6-F7-F8	
I014 001	insert	45°	F2-F8	
I015 001	insert	R1.5/2/3	F2-F4-F6-F7	
J003 001	screw	M8-M6	F2-F4-F6-F7	
J003 002	screw	M6-M6	F8	
J008 001	wedge	7.3mm	F8	
J005 001	nut	M8	F2-F4-F6-F7	
J006 002	wedge	19mm	F2	
J007 001	wedge	24mm	F4-F6	
J007 002	wedge	29mm	F7	
I001 001	knife	7.5X12X1.5	F8	

**One profile to be chosen*

Machine	Macchina	Maschine
Application	Applicazioni	Einsatzbereich
Advantages	Vantaggi	Vorteile

Sets of cutter-heads for doors with separated ashlar

Gruppi sagomati per porte con bugna riportata

Fräsersätze für Türen mit getrenntem Quaderstein

A067

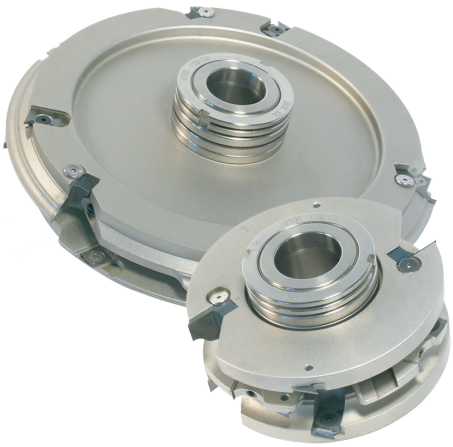

Code	D (mm)	d (mm)	Z	Ref.	€
A067 001	130	30 (40)	2	F1/F2/F8	
A067 002	300	30 (40)	3	F3/F4/F5	

**The maximum bore size is shown between the brackets*

Code	Spare parts		Ref.	€
J009 002	screw	M5X7	F3-F4-F8	
I007 002	spur	14X14X2	F3-F4-F8	
J009 005	screw	M5X12	F1-F2-F3-F4-F8	
I014 001	insert	45°	F2-F8	
I015 001	insert	R1.5/2/3	F1-F2-F3-F4	
J014 001	screw	M6X14	F3	
J001 001	screw	M5X10	F3	
J015 001	mobile support RH/LH		F3	
J003 002	screw	M6-M6	F8	
J008 001	wedge	7.3mm	F8	
J003 001	screw	M8-M6	F1-F2-F3-F4	
J005 001	nut	M8	F1-F2-F3-F4	
J006 002	wedge	19mm	F2	
J007 001	wedge	24mm	F4	
J007 002	wedge	29mm	F1	
J007 004	wedge	39mm	F3	
I001 001	knife	7.5X12X1.5	F8	
I003 003	knife	40X12X1.5	F3	

**One profile to be chosen*

MEC MAN Tool tested according to the norm EN 847-1

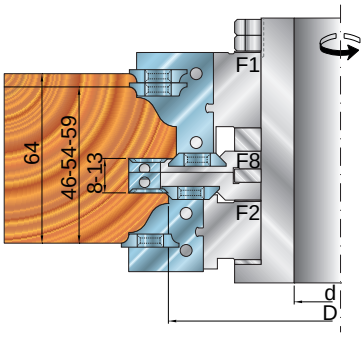

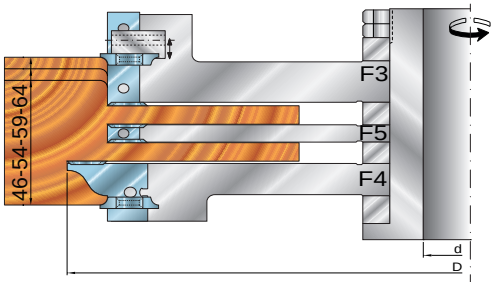

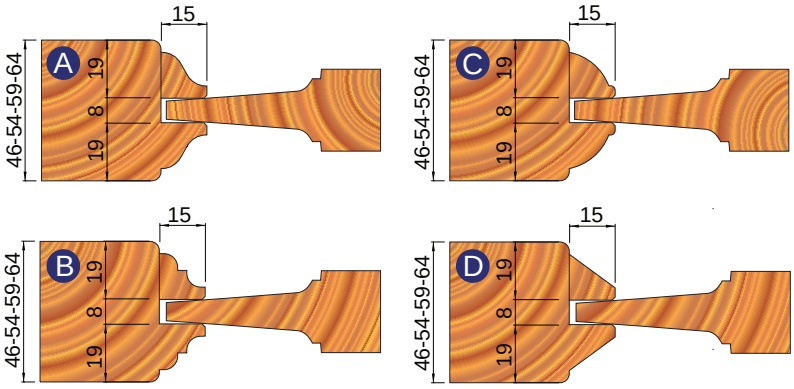

Machine	Macchina	Maschine
Application	Applicazioni	Einsatzbereich
Advantages	Vantaggi	Vorteile

BANER TOOLS

Profiled knives for A066 - A067

Coltelli sagomati per gruppo A066 - A067

Profilierte Messer A066 - A067

Profiled knives

Code	Dimension	Ref.	Knives	€
I041 001	42X33X2	F1-A	1	
I041 002	42X33X2	F1-B	2	
I041 003	42X33X2	F1-C	3	
I041 004	42X33X2	F1-D	4	
I041 005	30X25X2	F2-A	5	
I041 006	30X25X2	F2-B	6	
I041 007	30X25X2	F2-C	7	
I041 008	30X25X2	F2-D	8	
I041 009	25X35X2	F4-A	9	
I041 010	25X35X2	F4-B	10	
I041 011	25X35X2	F4-C	11	
I041 012	25X35X2	F4-D	12	
I041 013	25X35X2	F6-A	13	
I041 014	25X35X2	F6-B	14	
I041 015	25X35X2	F6-C	15	
I041 016	25X35X2	F6-D	16	
I041 017	30X25X2	F7-A	17	
I041 018	30X25X2	F7-B	18	
I041 019	30X25X2	F7-C	19	
I041 020	30X25X2	F7-D	20	

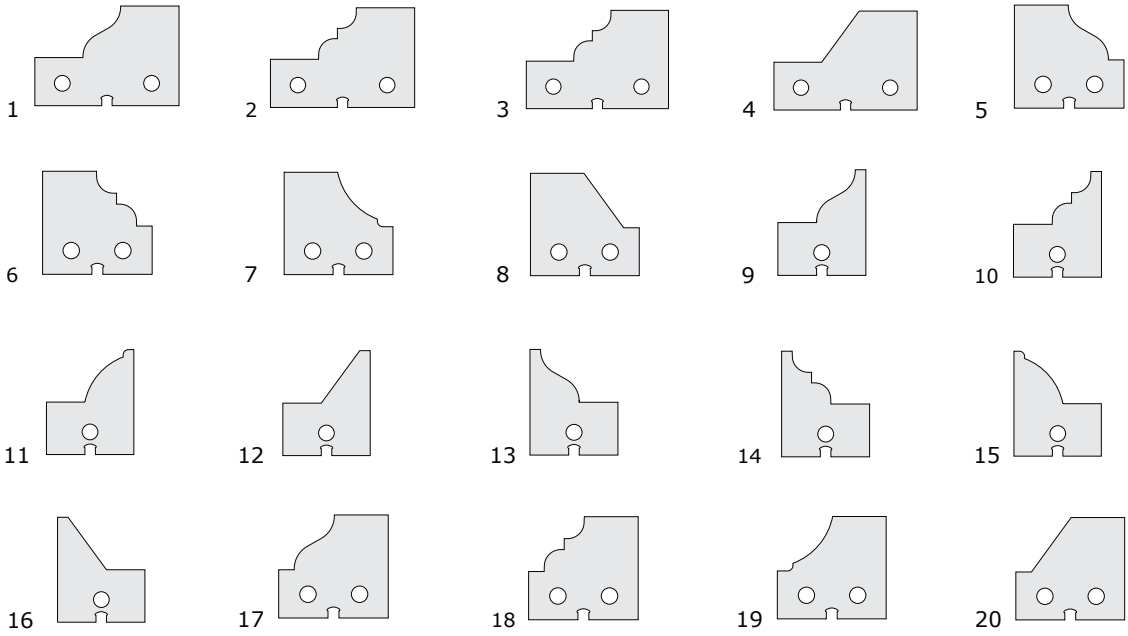

Machine	Macchina	Maschine
Application	Applicazioni	Einsatzbereich
Advantages	Vantaggi	Vorteile

Sets of adjustable cutter-heads for external door squaring

Gruppi regolabili per squadratura esterna di porte

Einstellbare Gruppen für die externe Türquadrierung

A068

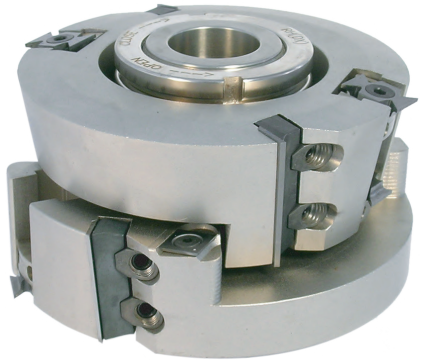

Tool tested according to the norm EN 847-1

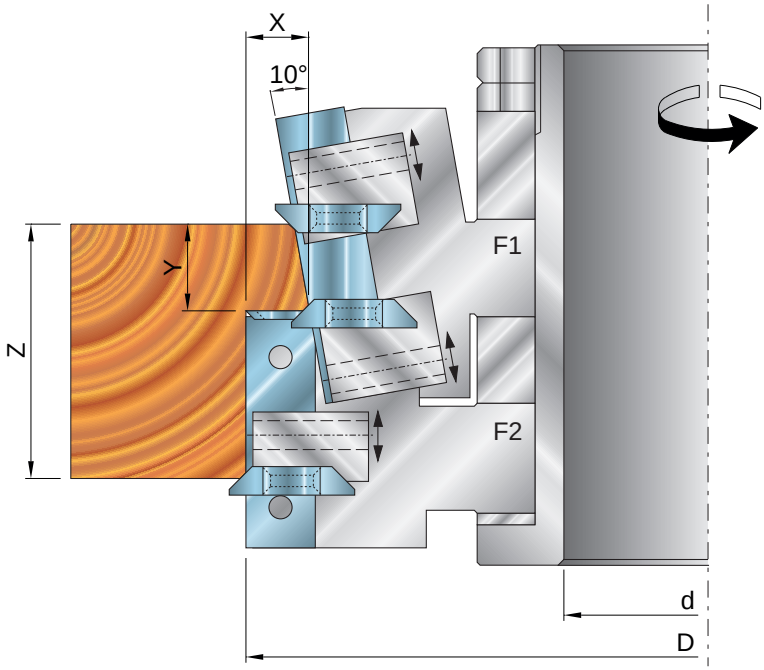

Code	D (mm)	X (mm)	Y (mm)	Z (mm)	d (mm)	Z	€
A068 001	150	10÷14	10÷14	20÷80	30 (40)	2	

The maximum bore size is shown between the brackets

X= Min 10mm. Max 14mm.
Y= Min 10mm. Max 14mm.
Z= Min 20mm. Max 80mm.

Code	Spare parts			Ref.	€
J009 002	screw	M5X7		F2	
I007 002	spur	14X14X2		F2	
J014 001	screw	M6X14		F1-F2	
I014 001	insert	45°		F1-F2	
I015 001	insert	R1.5/2/3		F1-F2	
J001 001	screw	M5X10		F1-F2	
J015 001	mobile support RH/LH			F1-F2	
J003 001	screw	M8-M6		F1-F2	
J005 001	nut	M8		F1-F2	
J007 004	wedge	39mm		F2	
J007 005	wedge	49mm		F1	
I003 003	knife	40X12X1.5		F2	
I003 004	knife	50X12X1.5		F1	

One profile to be chosen

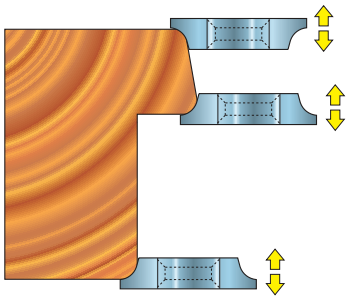

Machine	Macchina	Maschine
Application	Applicazioni	Einsatzbereich
Advantages	Vantaggi	Vorteile

BANER TOOLS

Set of cutter-heads for sliding doors

Gruppi per porte scorrevoli

Fräsersatz für Schiebetüren

A069

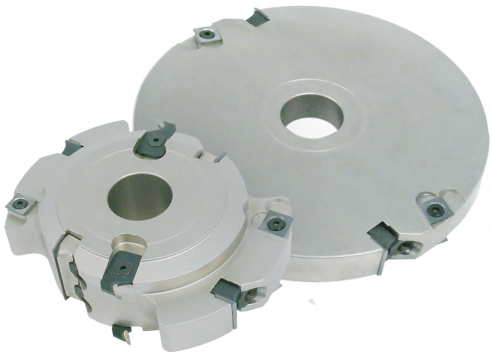

Tool tested according to the norm EN 847-1

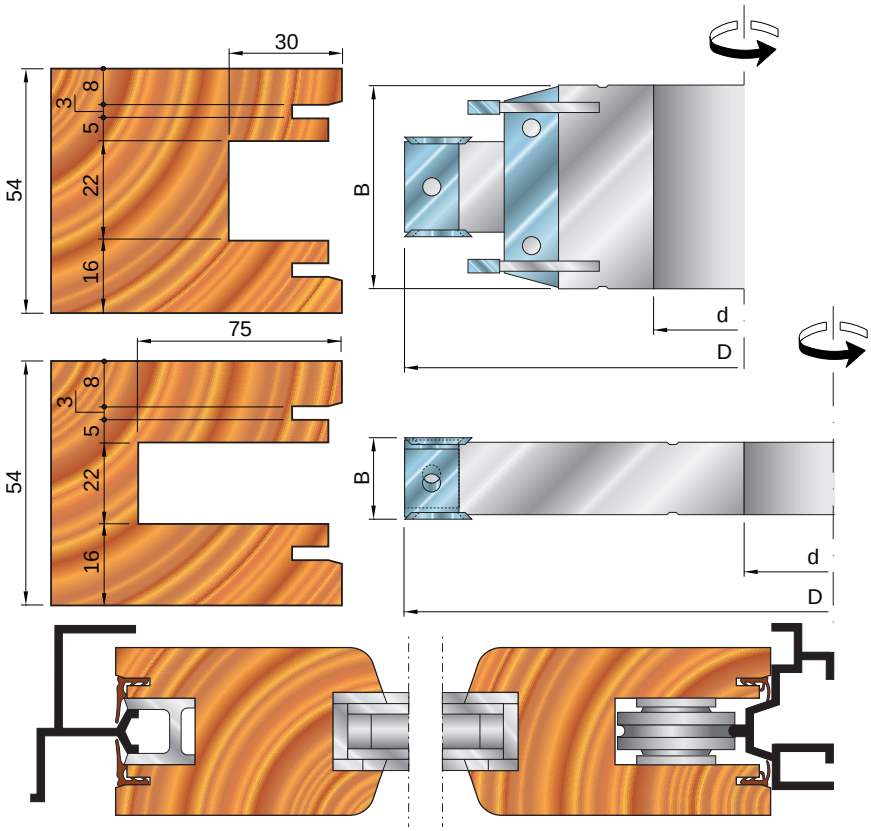

Code	D (mm)	B (mm)	d (mm)	Z	Ref.	€
A069 001	160	45	30 (40)	2	1	
A069 002	200	22	30 (40)	2	2	

**The maximum bore size is shown between the brackets*

Code	Spare parts			Ref.	€
J009 002	screw	M5X7		1-2	
I007 002	spur	14X14X2		1-2	
J009 005	screw	M5X12		1	
I016 010	insert	3mm		1	
I016 010	insert	3mm		1	
J003 001	screw	M8-M6		1-2	
J005 001	nut	M8		1-2	
J007 001	wedge	24mm		1-2	
J007 004	wedge	39mm		1	
I001 006	knife	20X12X1.5		1-2	
I042 001	knife	50X12X1.5		1	

**All profiles included*

Machine	**Macchina**	**Maschine**
Application	**Applicazioni**	**Einsatzbereich**
Advantages	**Vantaggi**	**Vorteile**

Multi-profile panel raising cutter-head Pro

Fresa per piattapanda multi-profilo Pro

Mehrprofil-Abplattfräser Pro

A070

MEC MAN Tool tested according to the norm EN 847-1

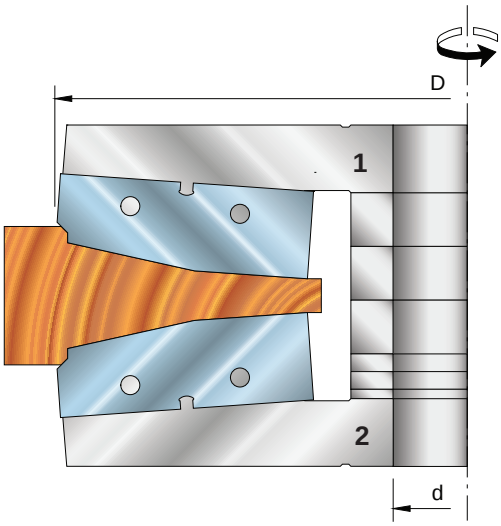

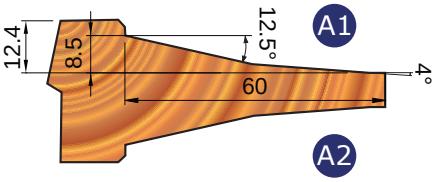

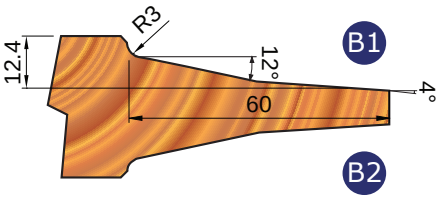

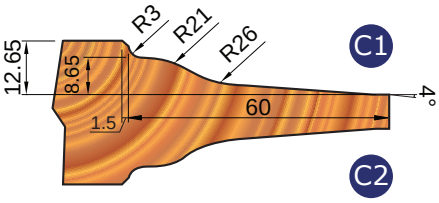

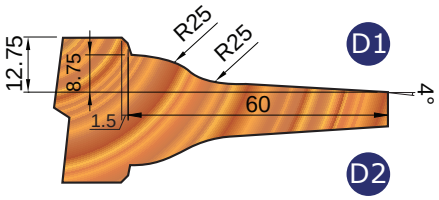

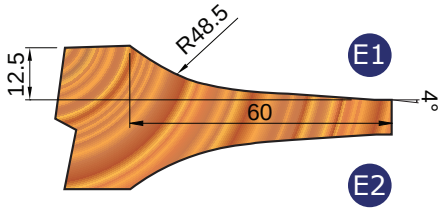

Code	D (mm)	B (mm)	d (mm)	Z	Ref.	€
A070 001	200	60	30 (50)	4	1	
A070 002	200	60	30 (50)	4	2	

**The maximum bore size is shown between the brackets*

Code	Spare parts			€
J003 001	screw	M8XM6		
J005 001	nut	M8		
J007 006	wedge	59mm		
I043 001	knife	60X20X2	A1	
I043 002	knife	60X20X2	A2	
I043 003	knife	60X20X2	B1	
I043 004	knife	60X20X2	B2	
I043 005	knife	60X20X2	C1	
I043 006	knife	60X20X2	C2	
I043 007	knife	60X20X2	D1	
I043 008	knife	60X20X2	D2	
I043 009	knife	60X20X2	E1	
I043 010	knife	60X20X2	E2	

**One profile to be chosen*

Machine	Macchina	Maschine
Application	Applicazioni	Einsatzbereich
Advantages	Vantaggi	Vorteile

BANER TOOLS

Multi-profile panel raising cutter-head Pro

Fresa per piattapanda multi-profilo Pro

Mehrprofil-Abplattfräser Pro

A070

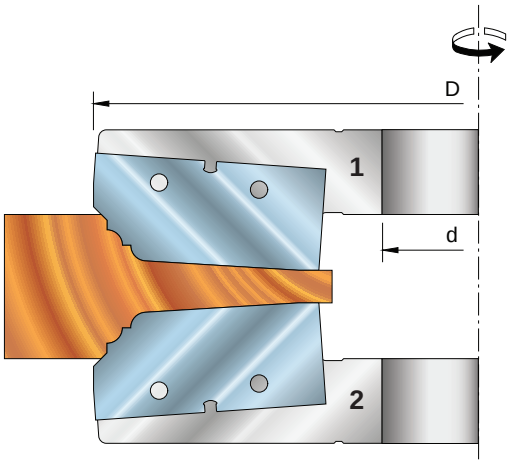

Tool tested according to the norm EN 847-1

Code	D (mm)	d (mm)	Z	Ref.	€
A070 003	200	30 (40)	4	1	
A070 004	200	30 (40)	4	2	

The maximum bore size is shown between the brackets

Code	Spare parts				€
I044 001	knife	60X20X2		A1	
I044 002	knife	60X20X2		A2	
I044 003	knife	60X20X2		B1	
I044 004	knife	60X20X2		B2	
I044 005	knife	60X20X2		C1	
I044 006	knife	60X20X2		C2	
I044 007	knife	60X20X2		D1	
I044 008	knife	60X20X2		D2	
I044 009	knife	60X20X2		E1	
I044 010	knife	60X20X2		E2	

A profile to choice

Machine	Macchina	Maschine
Application	Applicazioni	Einsatzbereich
Advantages	Vantaggi	Vorteile

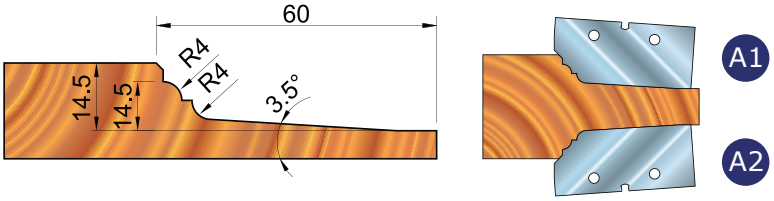
60
R4
R4
14.5
14.5
3.5°
A1
A2

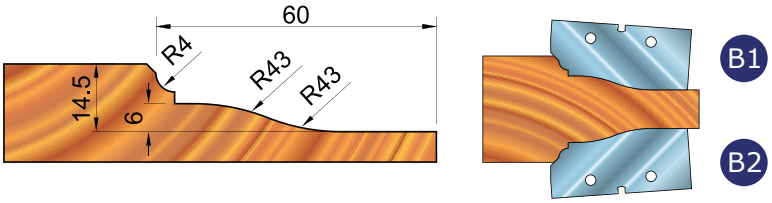
60
R4
R43
R43
14.5
6
B1
B2

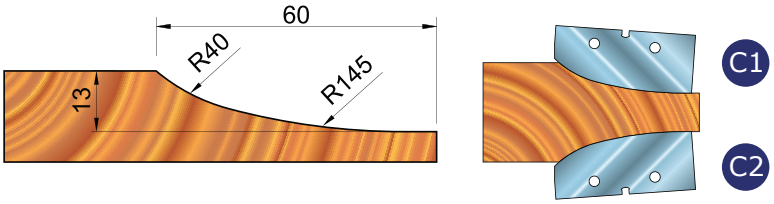
60
R40
R145
13
C1
C2

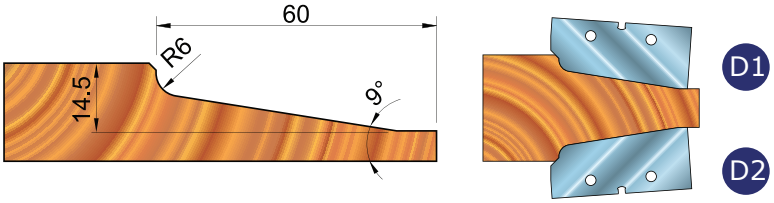
60
R6
14.5
9°
D1
D2

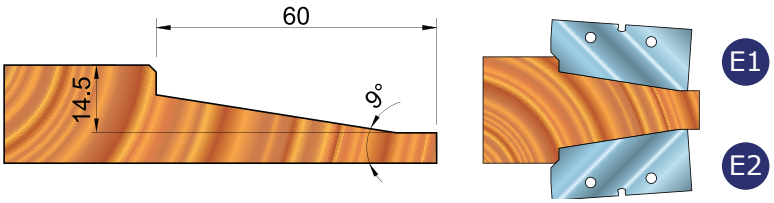
60
14.5
9°
E1
E2

BANER TOOLS

Multi-profile panel raising cutter-head Plus

Fresa per piattapanda multi-profilo Plus

Mehrprofil-Abplattfräser Plus

A071

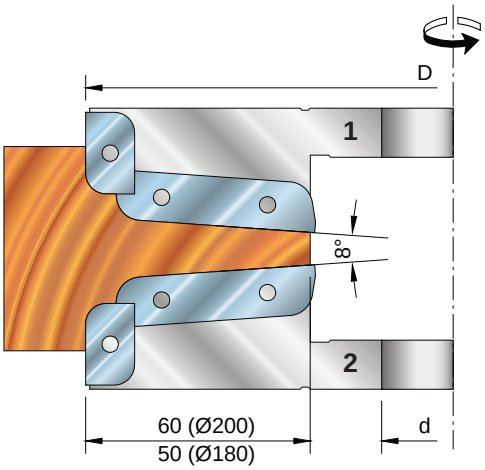

Tool tested according to the norm EN 847-1

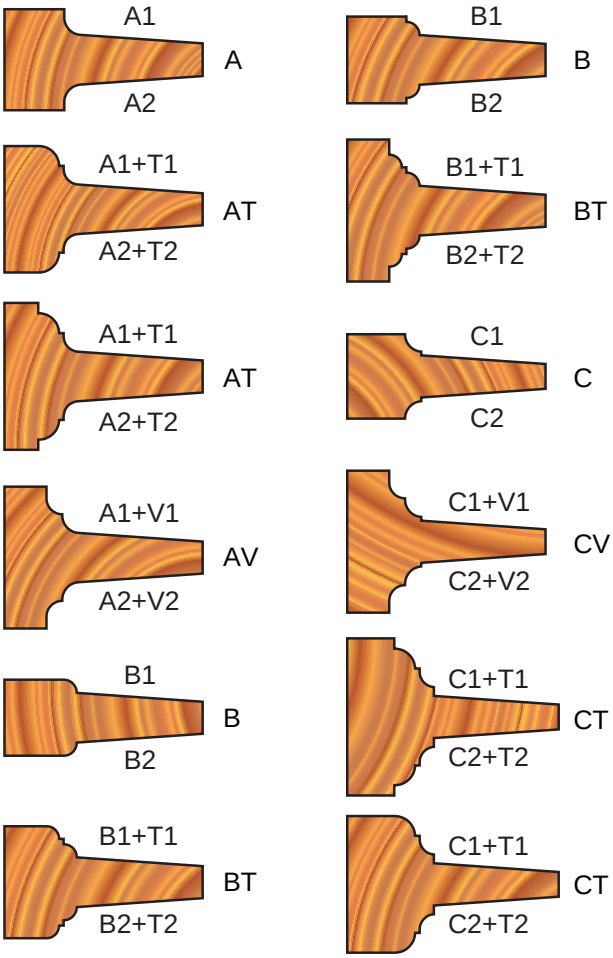

Code	D (mm)	d (mm)	Z	Ref.	€
A071 001	180	30 (50)	2+2	1	
A071 002	180	30 (50)	2+2	2	
A071 003	200	30 (50)	2+2	1	
A071 004	200	30 (50)	2+2	2	

**The maximum bore size is shown between the brackets*

Code	D	Spare parts			€
J003 001		screw	M8-M6		
J005 001		nut	M8		
J006 002		wedge	19mm		
J007 005		wedge	49mm		
I045 001		knife	20X12X1.5	V1	
I045 002		knife	20X12X1.5	V2	
I045 003		knife	20X12X1.5	T1	
I045 004		knife	20X12X1.5	T2	
I045 005	180	knife	50X12X1.5	A1	
I045 006	180	knife	50X12X1.5	A2	
I045 007	180	knife	50X12X1.5	B1	
I045 008	180	knife	50X12X1.5	B2	
I045 009	180	knife	50X12X1.5	C1	
I045 010	180	knife	50X12X1.5	C2	
I045 011	200	knife	60X12X1.5	A1	
I045 012	200	knife	60X12X1.5	A2	
I045 013	200	knife	60X12X1.5	B1	
I045 014	200	knife	60X12X1.5	B2	
I045 015	200	knife	60X12X1.5	C1	
I045 016	200	knife	60X12X1.5	C2	

**All profiles included*
**Spare knives in packs of 10 pz*

Machine	**Macchina**	**Maschine**
Application	**Applicazioni**	**Einsatzbereich**
Advantages	**Vantaggi**	**Vorteile**

A 8

Kitchen Cabinets | Antine | Küchenschränke

A072 pag. 98

- Set of combined cutter-heads for kitchen cabinets 20÷37
- Gruppi combinati per antine 20÷37
- Satz Kombischneider für Küchenschränke 20÷37

A073 pag. 100

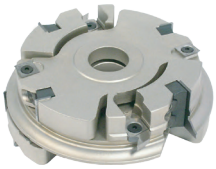

- Set of combined cutter-heads for kitchen cabinets 22÷31
- Gruppi combinati per antine 22÷31
- Satz Kombischneider für Küchenschränke 22÷31

A074 pag. 102

- Cutter-head for kitchen cabinets - Profile and counter profile
- Fresa per antine - Profilo e controprofilo
- Fräskopf für Küchenschränke - Profil und Konterprofil

A075 pag. 104

- Set of combined cutter-heads for kitchen cabinets Plus
- Gruppi combinati per antine Plus
- Satz Kombischneider für Küchenschränke Plus

A076 pag. 106

- Set of combined cutter-heads for kitchen cabinets X-Plus
- Gruppi combinati per antine X-Plus
- Satz Kombischneider für Küchenschränke X-Plus

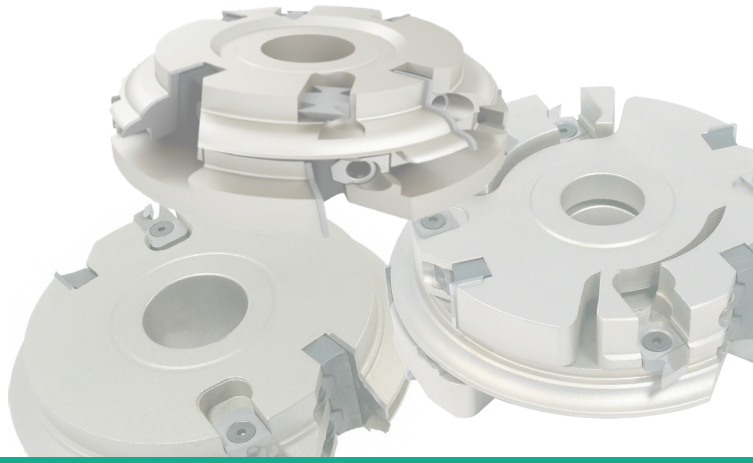

Set of combined cutter-heads for kitchen cabinets 20÷37

Gruppi combinati per antine 20÷37

Satz Kombischneider für Küchenschränke 20÷37

A072

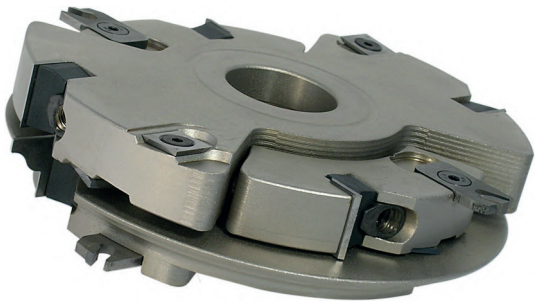

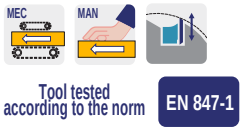

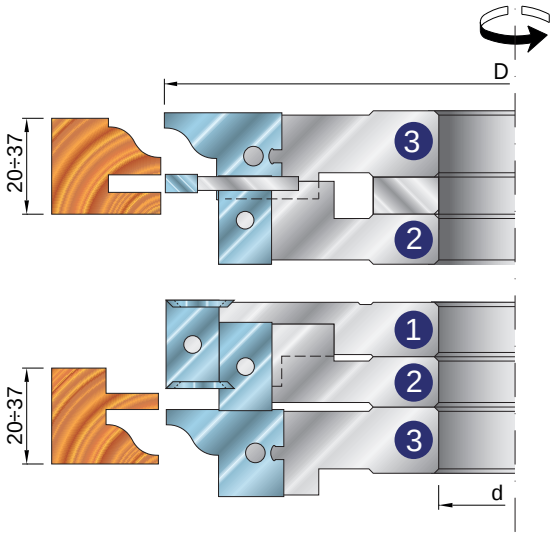

Code	D (mm)	B (mm)	d (mm)	Z	€
A072 001	160	20÷37	30 (40)	2	

The maximum bore size is shown between the brackets

Code		Spare parts		Ref.	€
J009 002	screw	M5X7		1-2	
I007 002	spur	14X14X2		1-2	
J009 005	screw	M5X12		2-3	
I016 011	insert	4mm		2	
I016 011	insert	4mm		3	
J003 001	screw	M8-M6		1-2-3	
J005 001	nut	M8		1-2-3	
J006 002	wedge	19mm		1-2-3	
I001 006	knife	20X12X1.5		1-2	
I046 001	knife	20X30X2	A	3	
I046 002	knife	20X30X2	B	3	
I046 003	knife	20X30X2	C	3	
I046 004	knife	20X30X2	D	3	

All profiles included

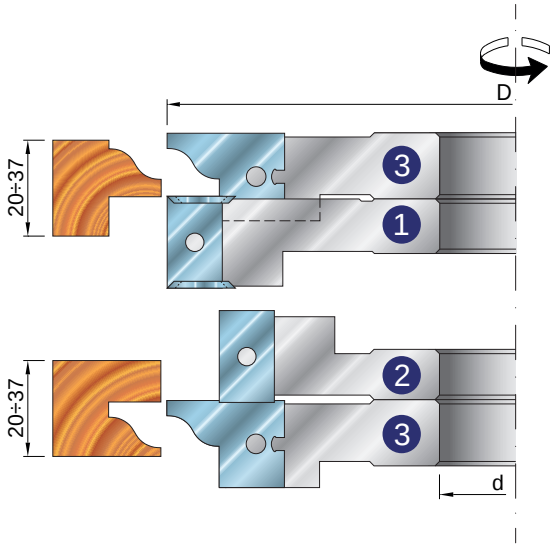

Machine	Macchina	Maschine
Application	Applicazioni	Einsatzbereich
Advantages	Vantaggi	Vorteile

Examples of realizable profiles:

PROFILE A

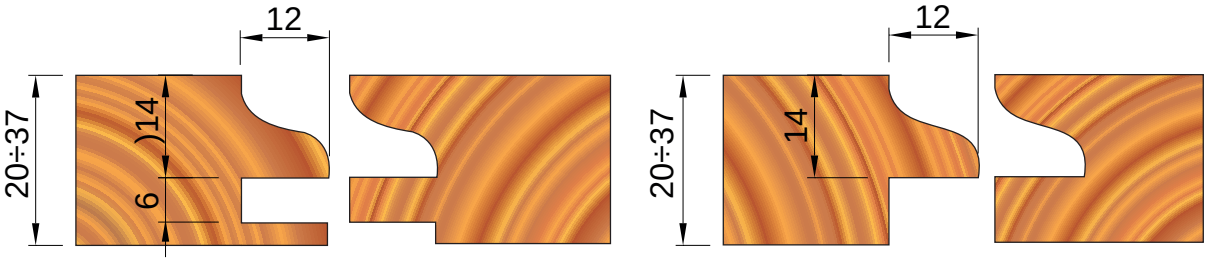

PROFILE B

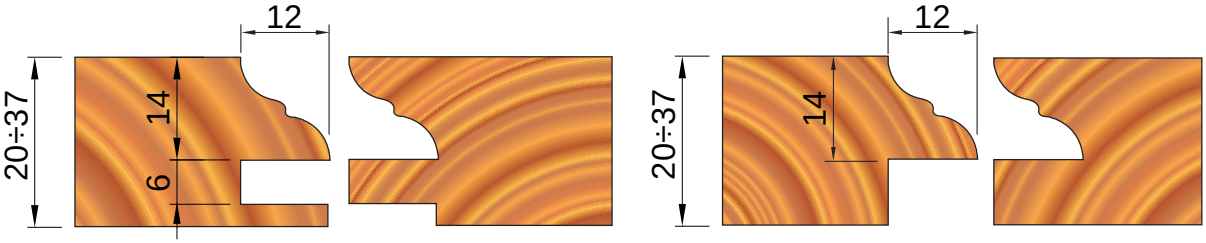

PROFILE C

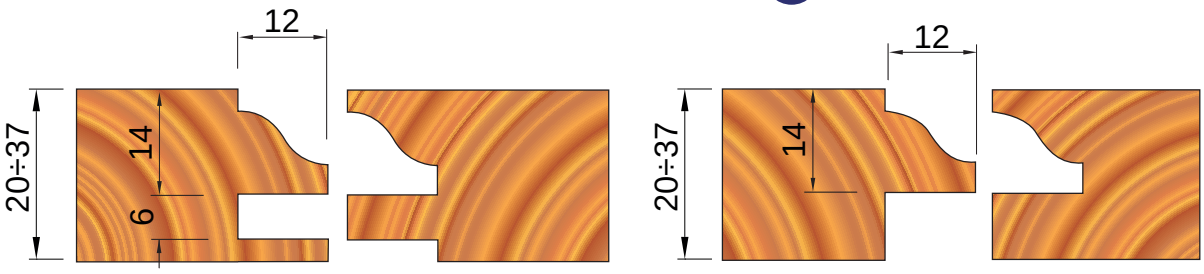

PROFILE D

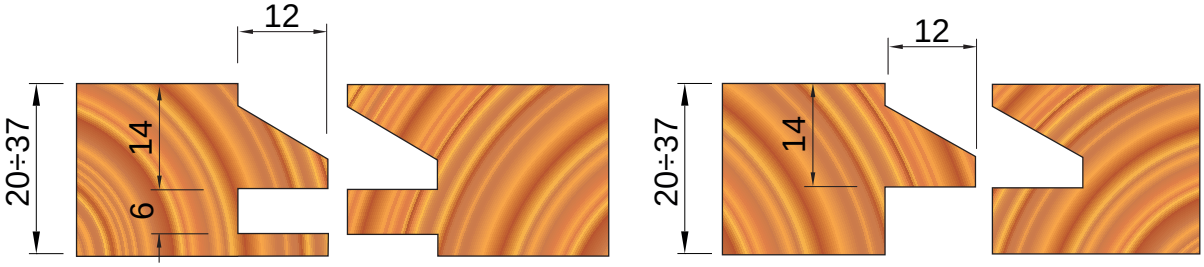

BANER TOOLS

Set of combined cutter-heads for kitchen cabinets 22÷31

Gruppi combinati per antine 22÷31

Satz Kombischneider für Küchenschränke 22÷31

A073

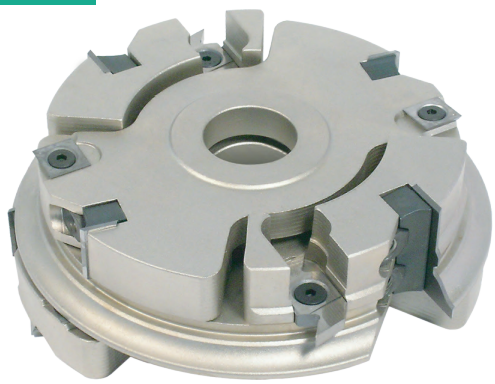

Tool tested according to the norm EN 847-1

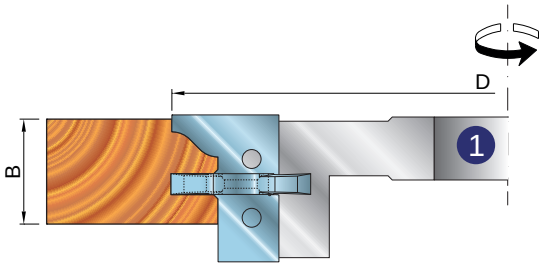

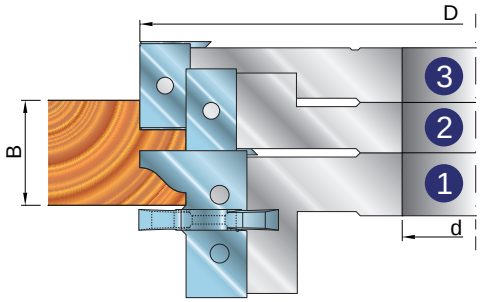

Code	D (mm)	B (mm)	d (mm)	Z	€
A073 001	160	22÷31	30 (40)	2	

**The maximum bore size is shown between the brackets*

Code	Spare parts			Ref.	€
J009 002	screw	M5X7		2-3	
I007 002	spur	14X14X2		2-3	
J009 005	screw	M5X12		1	
I016 003	insert	5mm		1	
J003 001	screw	M8-M6		1-2-3	
J005 001	nut	M8		1-2-3	
J006 002	wedge	19mm		2-3	
J007 003	wedge	34mm		1	
I001 006	knife	20X12X1.5		2-3	
I047 001	knife	35X30X2	A	1	
I047 002	knife	35X30X2	B	1	
I047 003	knife	35X30X2	C	1	
I047 004	knife	35X30X2	D	1	
I047 005	knife	35X30X2	E	1	

**All profiles included*

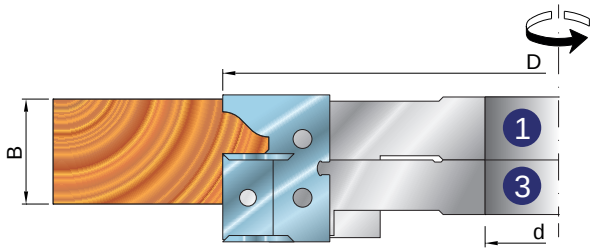

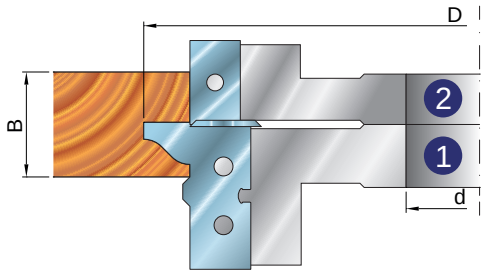

Machine	Macchina	Maschine
Application	Applicazioni	Einsatzbereich
Advantages	Vantaggi	Vorteile

Examples of realizable profiles:

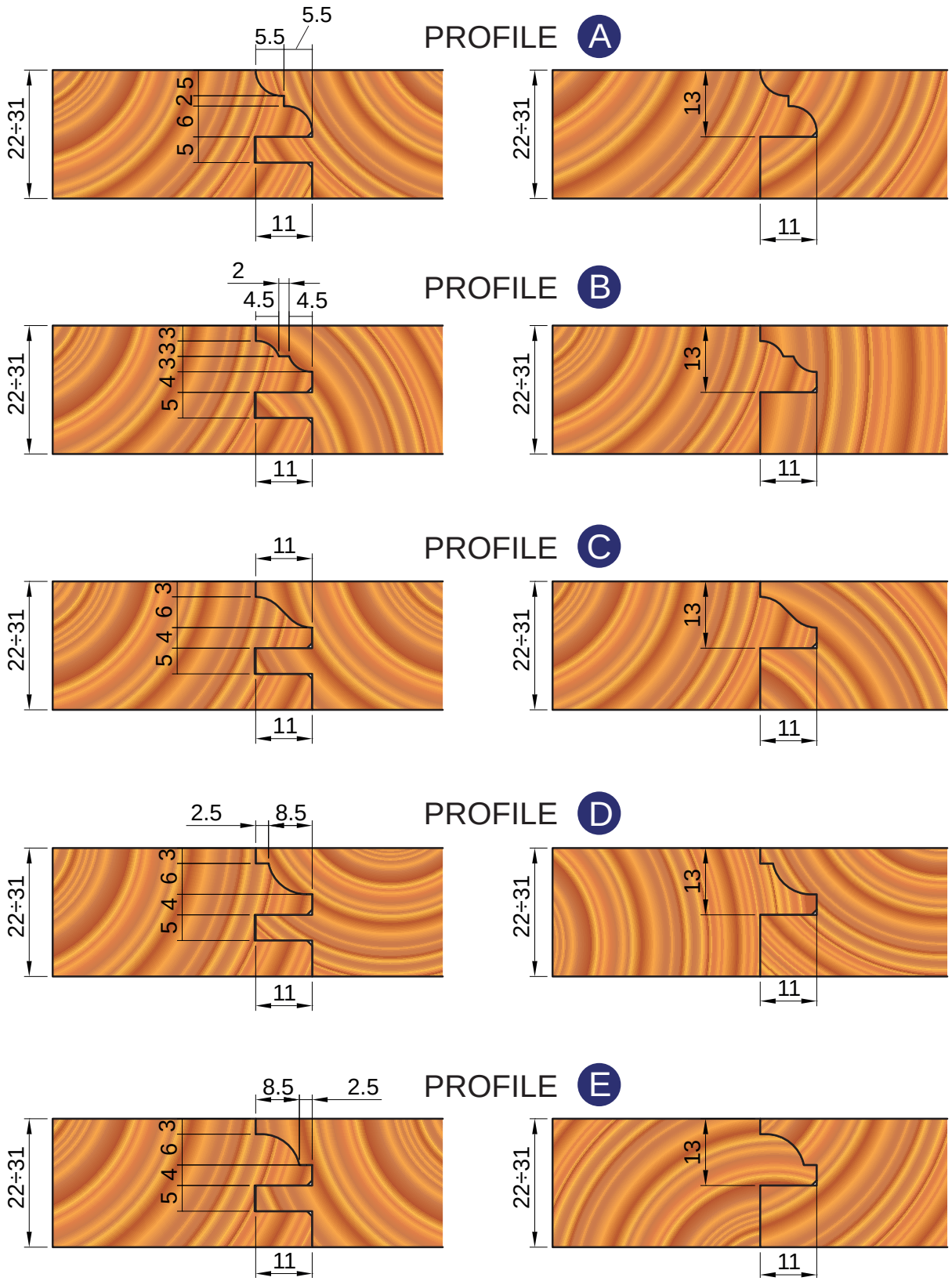

BANER TOOLS

Cutter-head for kitchen cabinets - Profile and counter profile

Fresa per antine - Profilo e controprofilo

Fräskopf für Küchenschränke - Profil und Konterprofil

A074

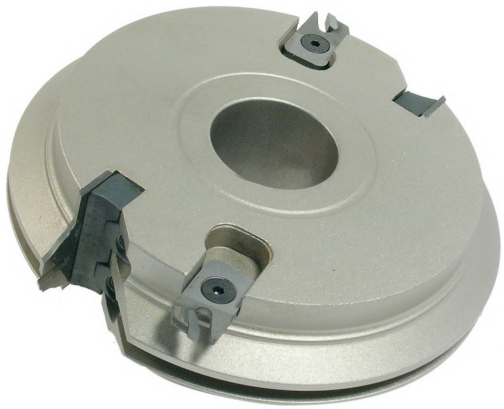

Tool tested according to the norm EN 847-1

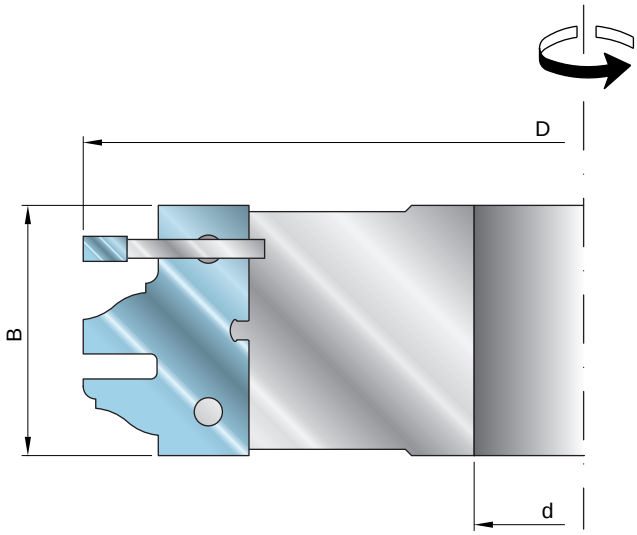

Code	D (mm)	B (mm)	d (mm)	Z	I	€
A074 001	160	40	30 (40)	2	2	

**The maximum bore size is shown between the brackets*

Code	Spare parts			€
J009 005	screw	M5X12		
I016 011	insert	4mm		
J003 001	screw	M8-M6		
J005 001	nut	M8		
J007 004	wedge	39mm		
I048 001	knife	40X30X2	A	
I048 002	knife	40X30X2	B	
I048 003	knife	40X30X2	C	
I048 004	knife	40X30X2	D	

**One profile to be choosen*

Machine	Macchina	Maschine
Application	Applicazioni	Einsatzbereich
Advantages	Vantaggi	Vorteile

Examples of realizable profiles:

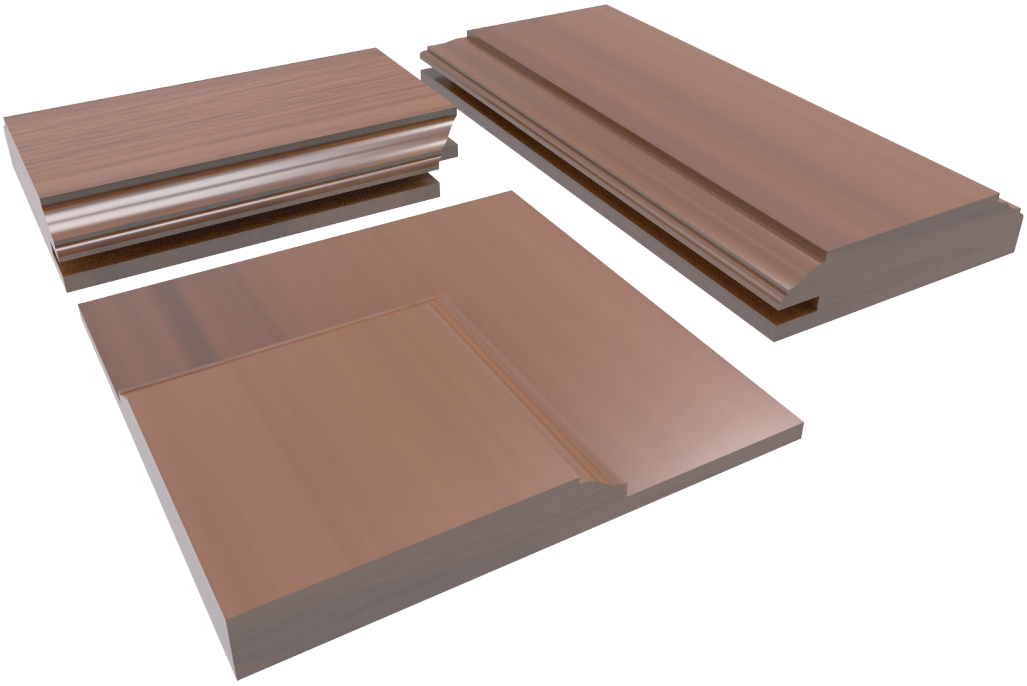

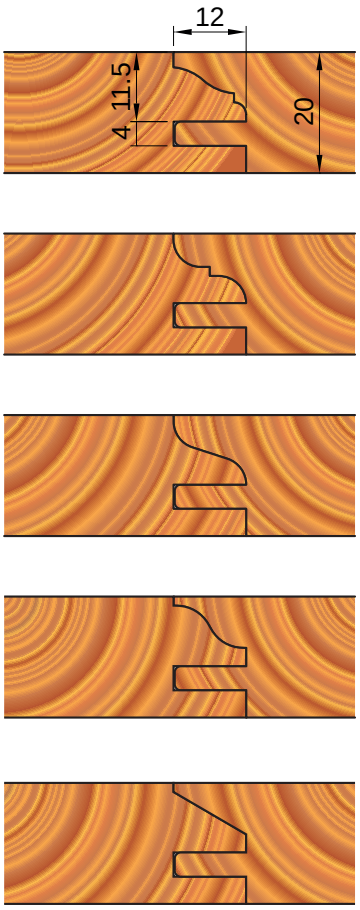

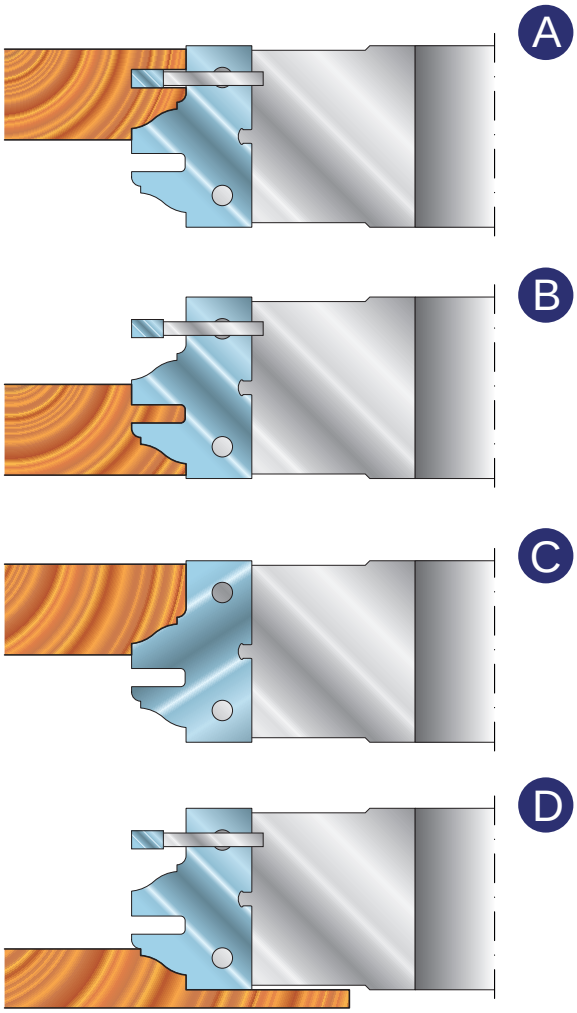

BANER TOOLS

Set of combined cutter-heads for kitchen cabinets Plus

Gruppi combinati per antine Plus

Satz Kombischneider für Küchenschränke Plus

A075

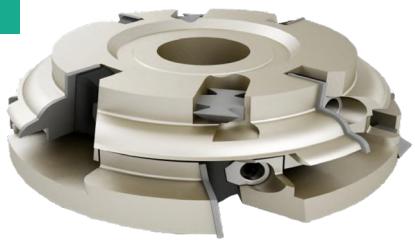

Code	D (mm)	d (mm)	Z	I	€
A075 001	160	30 (40)	2	2	

**The maximum bore size is shown between the brackets*

Code	Spare parts		€
I007 002	spur	14X14X2	
J014 001	screw	M6X14	
I014 001	bevellingins	45°	
J009 005	screw	M5X12	
J003 001	screw	M8-M6	
J005 001	nut	M8	
J006 002	wedge	19mm	
J007 001	wedge	24mm	
J007 002	wedge	29mm	
I049 001	knife	30x40x2	A
I049 002	knife	30x40x2	B
I049 003	knife	30x40x2	C
I049 004	knife	30x40x2	D
I049 005	knife	30x40x2	E
I049 006	knife	30x40x2	F
I049 007	knife	25x40x2	A
I049 008	knife	25x40x2	B
I049 009	knife	25x40x2	C
I049 010	knife	25x40x2	D
I049 011	knife	25x40x2	E
I049 012	knife	25x40x2	F
I049 013	knife	20x30x2	G
I049 014	insert	28x7x4	G

MEC MAN Tool tested according to the norm EN 847-1

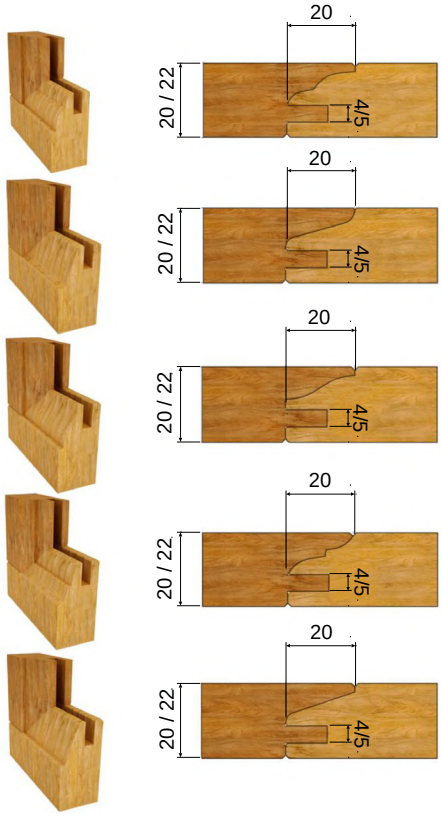

Machine	Macchina	Maschine
Application	Applicazioni	Einsatzbereich
Advantages	Vantaggi	Vorteile

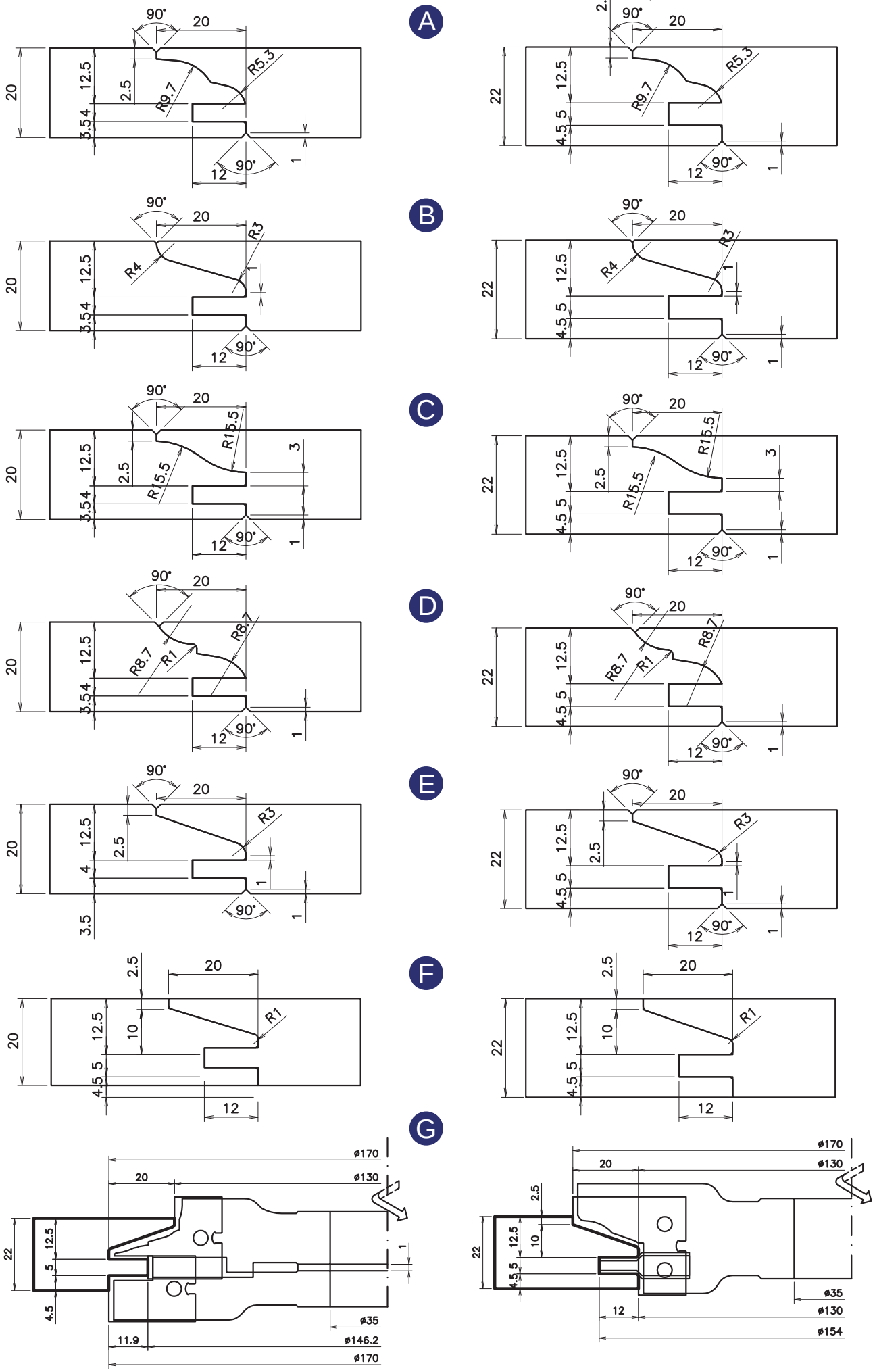
A
90°
20
R5.3
R9.7
12.5
2.5
3.54
12
1
22
4.5
5
2.
B
R3
R4
C
R15.5
3
D
R8.7
R1
E
4
F
10
G
ø170
ø130
ø35
ø146.2
ø154
11.9

BANER TOOLS

Set of combined cutter-heads for kitchen cabinets X-Plus

Gruppi combinati per antine X-Plus

Satz Kombischneider für Küchenschränke X-Plus

A076

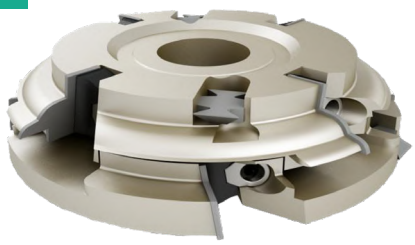

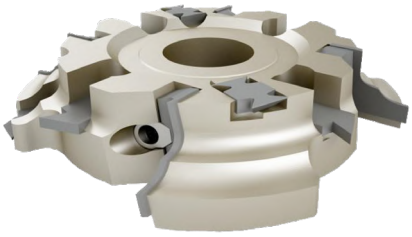

MEC MAN

Tool tested according to the norm EN 847-1

Code	D (mm)	d (mm)	Z	I	€
A076 001	160	30 (40)	2	2	

The maximum bore size is shown between the brackets

Code	Spare parts		€
I007 002	spur	14X14X2	
J014 001	screw	M6X14	
I014 001	bevellingins	45°	
J009 005	screw	M5X12	
J003 001	screw	M8-M6	
J005 001	nut	M8	
J006 002	wedge	19mm	
J007 001	wedge	24mm	
J007 002	wedge	29mm	
I050 001	knife	40x45x2	F
I050 002	knife	40x45x2	G
I050 003	knife	40x45x2	H
I050 004	knife	25x40x2	F
I050 005	knife	25x40x2	G
I050 006	knife	25x40x2	H
I050 007	knife	20x30x2	
I050 008	insert	28x7x4	

PROFILO "F"

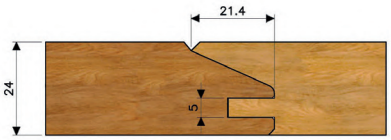

PROFILO "G"

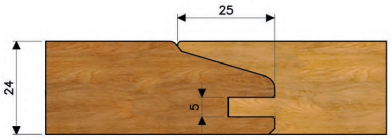

PROFILO "H"

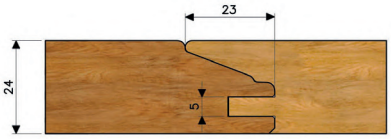

Machine	Macchina	Maschine
Application	Applicazioni	Einsatzbereich
Advantages	Vantaggi	Vorteile

Set of combined cutter-heads for kitchen cabinets X-Plus

Gruppi combinati per antine X-Plus

Satz Kombischneider für Küchenschränke X-Plus

A076

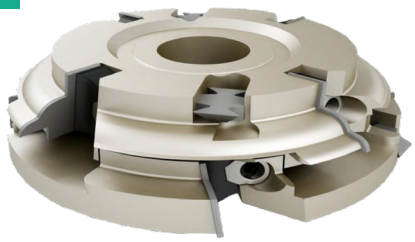

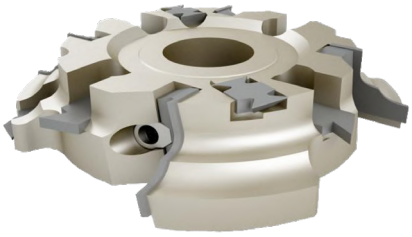

MEC MAN Tool tested according to the norm EN 847-1

PROFILO "I"

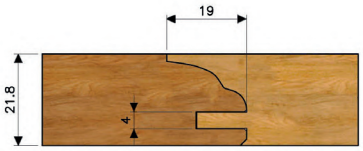

PROFILO "L"

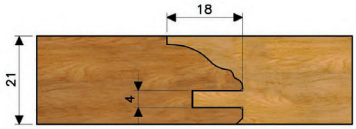

Code	D (mm)	d (mm)	Z	I	€
A076 002	160	30 (40)	2	2	

**The maximum bore size is shown between the brackets*

Code	Spare parts			€
I007 002	spur	14X14X2		
J014 001	screw	M6X14		
I014 001	bevellingins	45°		
J009 005	screw	M5X12		
J003 001	screw	M8-M6		
J005 001	nut	M8		
J006 002	wedge	19mm		
J007 001	wedge	24mm		
J007 002	wedge	29mm		
I050 009	knife	30x35x2	I	
I050 010	knife	30x35x2	L	
I050 011	knife	20x35x2	I	
I050 012	knife	20x35x2	L	
I050 013	knife	20x30x2		
I050 014	insert	28x7x3		

Machine	Macchina	Maschine
Application	Applicazioni	Einsatzbereich
Advantages	Vantaggi	Vorteile

BANER TOOLS

PROFILO “F”

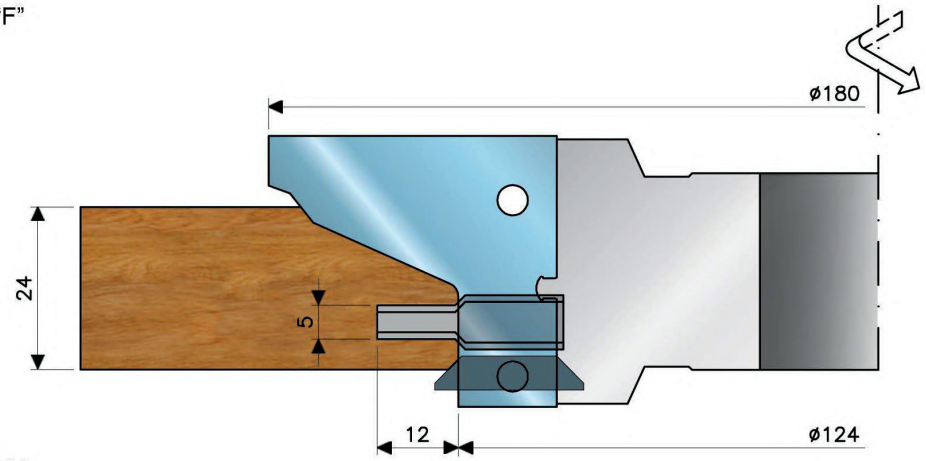

PROFILO “G”

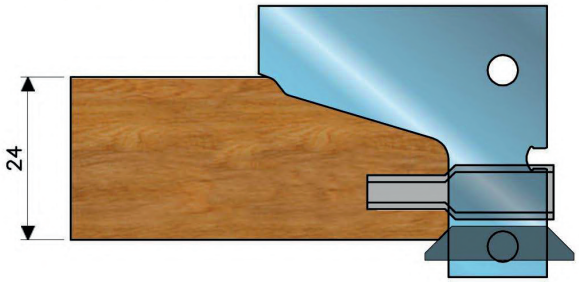

PROFILO “H”

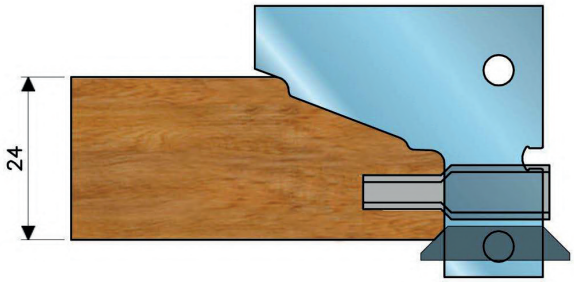

PROFILO “F”

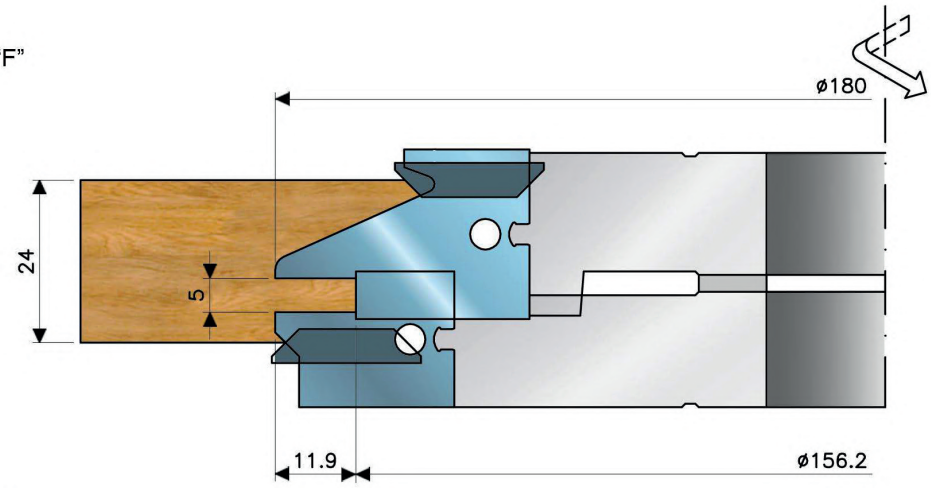

PROFILO “G”

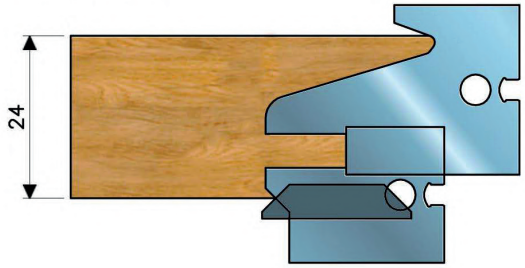

PROFILO “H”

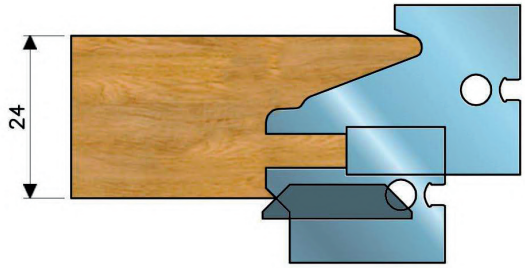

PROFILO “I”

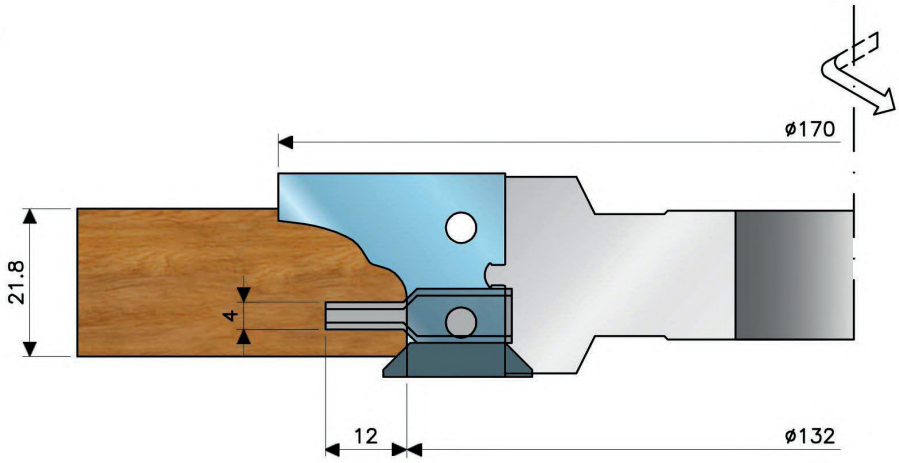

PROFILO “L”

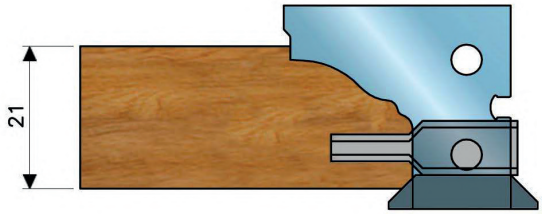

PROFILO “I”

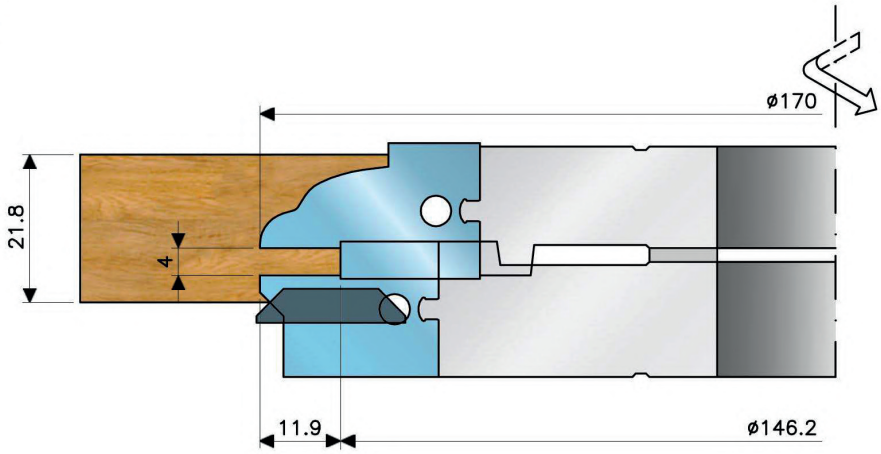

PROFILO “L”

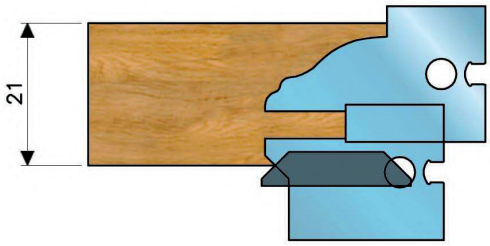

BANER TOOLS

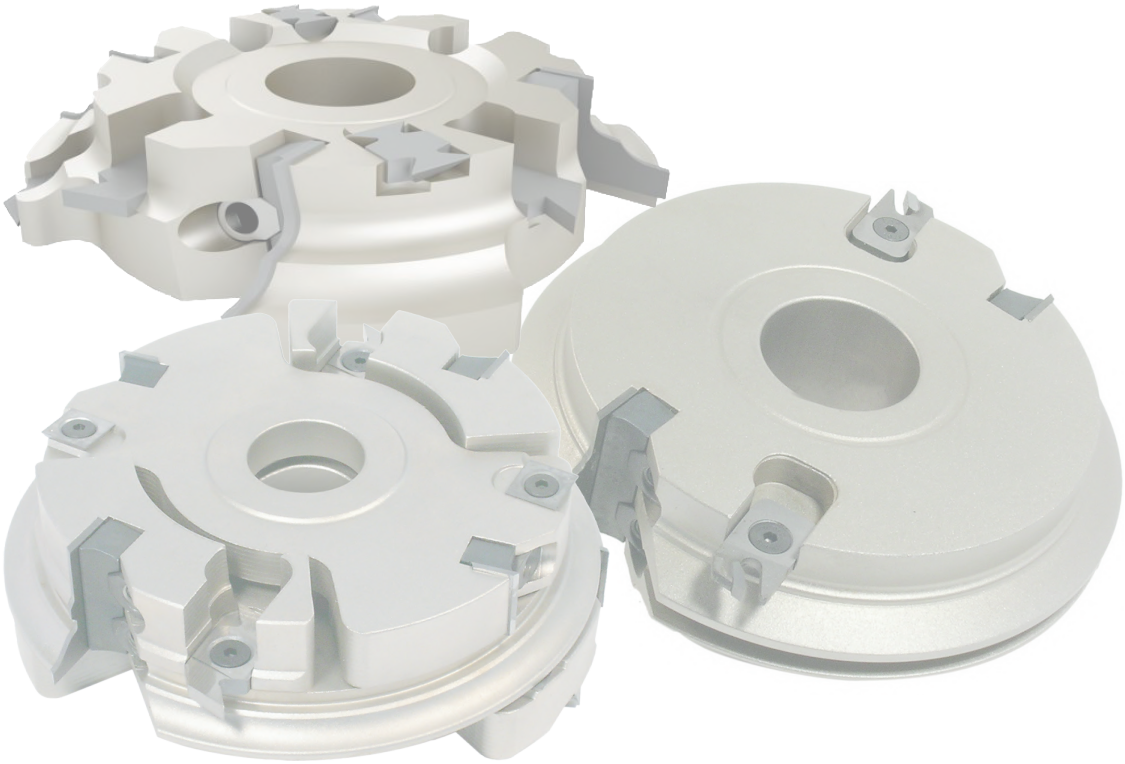

A 9

Brazed Tools Frese Saldobrasate Gelöteter Messerkopf

A077 pag. 112

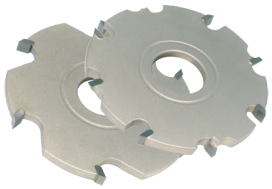

- Brazed cutter-head for grooves
- Fresa saldobrasata per canali
- Gelöteter Messerkopf Für Nuten

A078 pag. 113

- Adjustable brazed cutter-head for grooves with rings
- Fresa per incastri regolabile con anelli
- Verstellbar Gelöteter Messerkopf met Distanzringe

A079 pag. 114

- Concave quadrant round-off brazed cutter-head
- Fresa saldobrasata a raggiare quarto di tondo concavi
- Gelöteter Konkav Viertelstabfräser

A080 pag. 115

- Convex quadrant round-off brazed cutter-head
- Fresa saldobrasata a raggiare quarto di tondo convesso
- Gelöteter Konvex Viertelstabfräser

A081 pag. 116

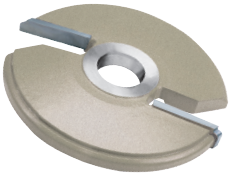

- Panel raising brazed cutter-head
- Fresa per piattapanda saldobrasata
- Gelöteter Abplatt-Messerköpfen

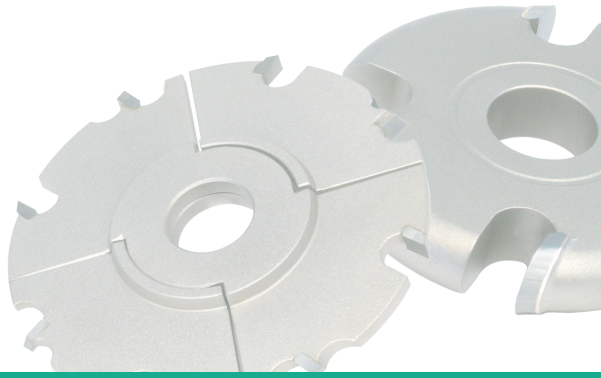

Brazed cutter-head for grooves

Fresa saldobrasata per canali

Gelöteter Messerkopf Für Nuten

A077

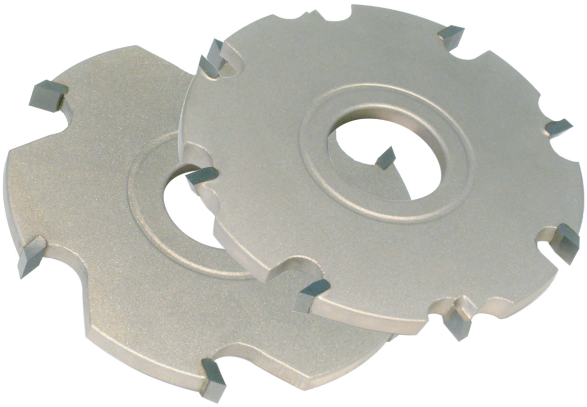

Tool tested according to the norm EN 847-1

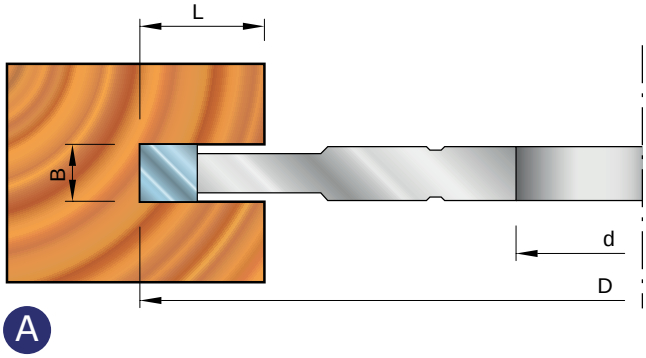

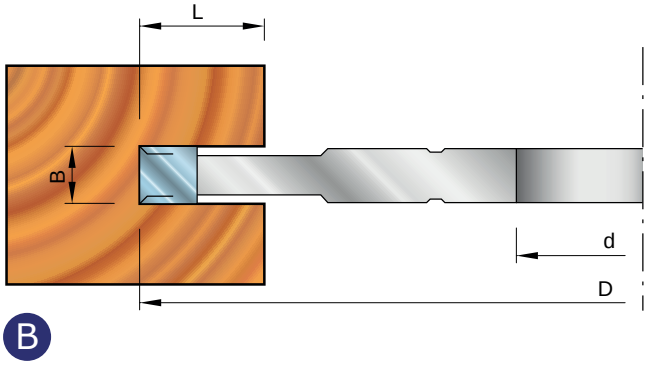

Code	D (mm)	B (mm)	d (mm)	L (mm)	Z	€
		A				
A077 001	150	4	30 (40)	0÷40	6	
A077 002	150	5	30 (40)	0÷40	6	
A077 003	150	6	30 (40)	0÷40	6	
A077 004	150	8	30 (40)	0÷40	6	
A077 005	150	10	30 (40)	0÷40	6	
A077 006	150	12	30 (40)	0÷40	6	
A077 007	150	14	30 (40)	0÷40	6	
A077 008	150	16	30 (40)	0÷40	6	
A077 009	150	18	30 (40)	0÷40	6	
A077 010	150	20	30 (40)	0÷40	6	
	with trimmers	B				
A077 011	150	4	30 (40)	0÷40	4+4	
A077 012	150	5	30 (40)	0÷40	4+4	
A077 013	150	6	30 (40)	0÷40	4+4	
A077 014	150	8	30 (40)	0÷40	4+4	
A077 015	150	10	30 (40)	0÷40	4+4	
A077 016	150	12	30 (40)	0÷40	4+4	
A077 017	150	14	30 (40)	0÷40	4+4	
A077 018	150	16	30 (40)	0÷40	4+4	
A077 019	150	18	30 (40)	0÷40	4+4	
A077 020	150	20	30 (40)	0÷40	4+4	

**The maximum bore size is shown between the brackets*

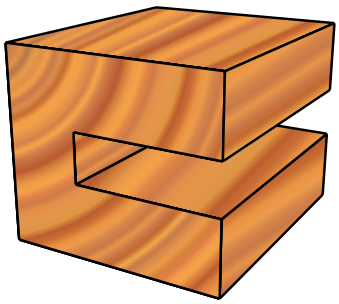

Machine	Macchina	Maschine
Application	Applicazioni	Einsatzbereich
Advantages	Vantaggi	Vorteile

Adjustable brazed cutter-head for grooves with rings

Fresa per incastri regolabile con anelli

Verstellbar Gelöteter Messerkopf met Distanzringe

A078

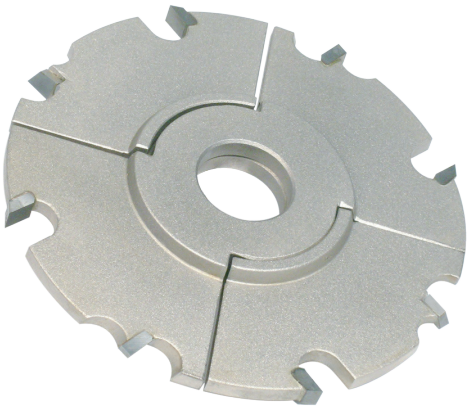

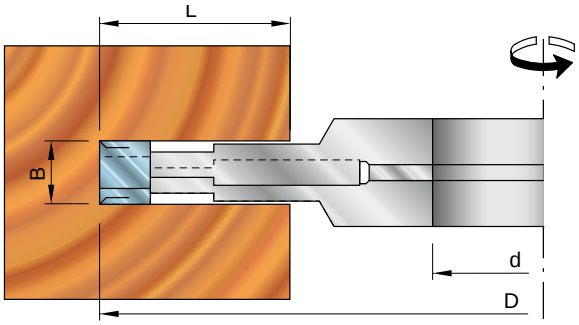

Tool tested according to the norm EN 847-1

Code	D (mm)	B (mm)	d (mm)	L (mm)	Z	€
A078 001	150	4÷7.5	30 (40)	0÷40	4+4	
A078 002	150	7.5÷14.5	30 (40)	0÷40	4+4	
A078 003	160	10÷19	30 (40)	0÷40	4+4	

**The maximum bore size is shown between the brackets*

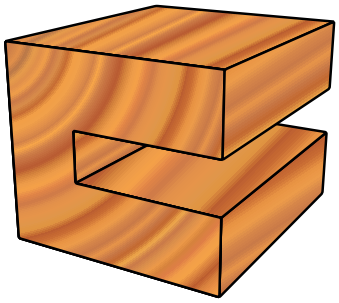

Machine	Macchina	Maschine
Application	Applicazioni	Einsatzbereich
Advantages	Vantaggi	Vorteile

BANER TOOLS

Concave quadrant round-off brazed cutter-head

Fresa saldobrasata a raggiare quarto di tondo concavi

Gelöteter Konkav Viertelstabfräser

A079

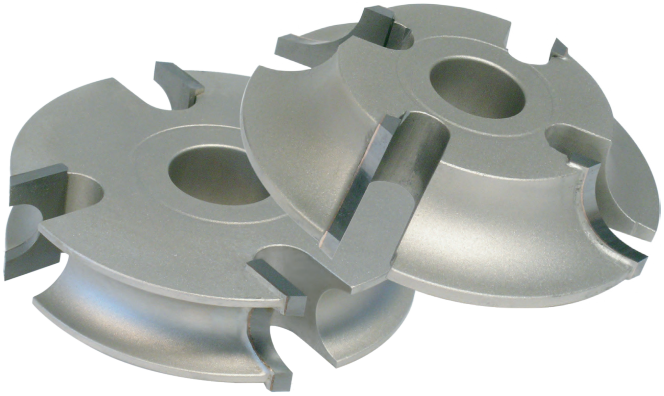

Tool tested according to the norm EN 847-1

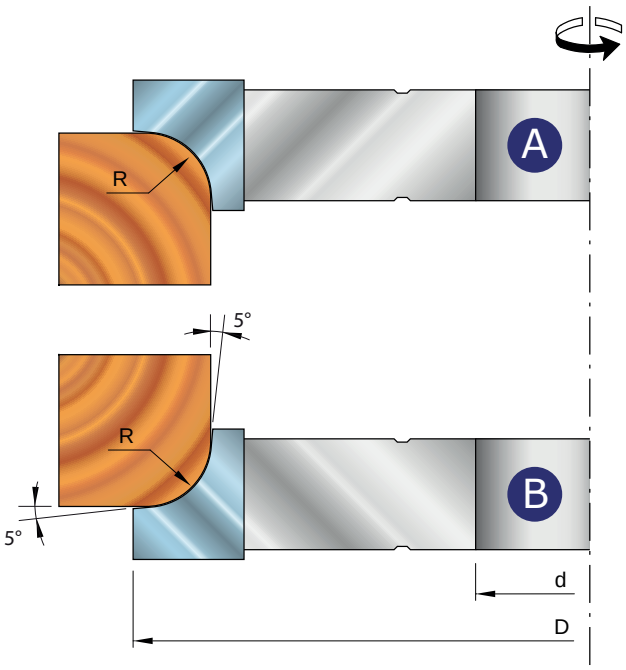

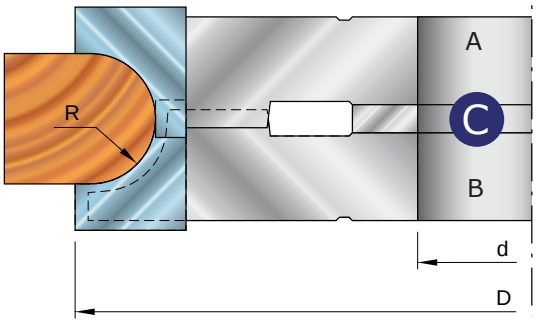

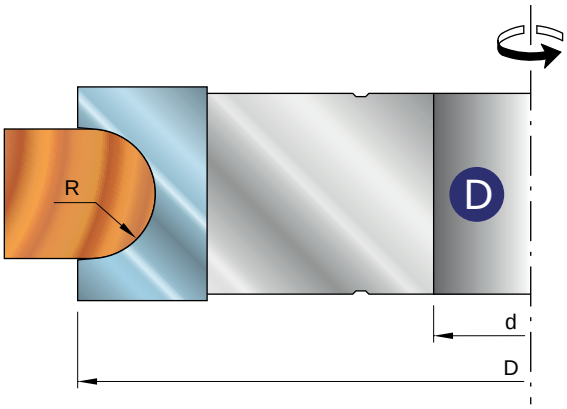

Code	D (mm)	R (mm)	d (mm)	Z	Type*	€
		A B C				
A079 001	140	5	30 (40)	4	A-B-C	
A079 002	140	7.5	30 (40)	4	A-B-C	
A079 003	140	10	30 (40)	4	A-B-C	
A079 004	140	12.5	30 (40)	4	A-B-C	
A079 005	140	15	30 (40)	4	A-B-C	
A079 006	140	20	30 (40)	4	A-B-C	
A079 007	160	25	30 (40)	4	A-B-C	
A079 008	160	30	30 (40)	4	A-B-C	
A079 009	180	35	30 (40)	4	A-B-C	
A079 010	180	40	30 (40)	4	A-B-C	
A079 011	200	50	30 (40)	4	A-B-C	
		D				
A079 012	140	4	30 (40)	4	D	
A079 013	140	5	30 (40)	4	D	
A079 014	140	5.5	30 (40)	4	D	
A079 015	140	6	30 (40)	4	D	
A079 016	140	7.5	30 (40)	4	D	
A079 017	140	10	30 (40)	4	D	
A079 018	140	12.5	30 (40)	4	D	
A079 019	140	15	30 (40)	4	D	
A079 020	140	20	30 (40)	4	D	

**When ordering indicate type A-B-C-D*
**The maximum bore size is shown between the brackets*

Machine	**Macchina**	**Maschine**
Application	**Applicazioni**	**Einsatzbereich**
Advantages	**Vantaggi**	**Vorteile**

Convex quadrant round-off brazed cutter-head

Fresa saldobrasata a raggiare quarto di tondo convesso

Gelöteter Konvex Viertelstabfräser

A080

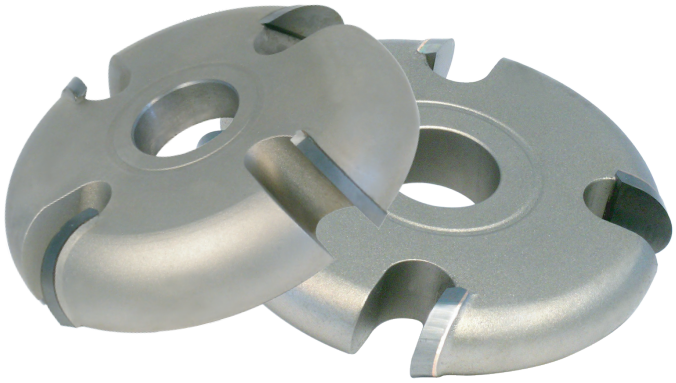

Tool tested according to the norm EN 847-1

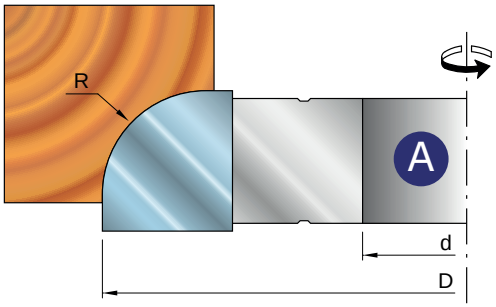

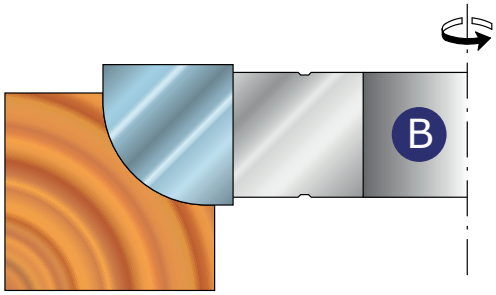

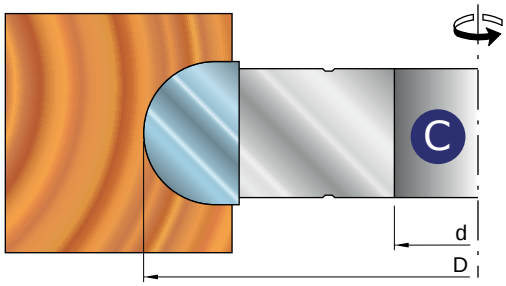

Code	D (mm)	R (mm)	d (mm)	Z	Type*	€
		A	B			
A080 001	140	5	30 (40)	4	A-B	
A080 002	140	7.5	30 (40)	4	A-B	
A080 003	140	10	30 (40)	4	A-B	
A080 004	140	12.5	30 (40)	4	A-B	
A080 005	140	15	30 (40)	4	A-B	
A080 006	140	20	30 (40)	4	A-B	
A080 007	160	25	30 (40)	4	A-B	
A080 008	160	30	30 (40)	4	A-B	
A080 009	160	35	30 (40)	4	A-B	
A080 010	160	40	30 (40)	4	A-B	
A080 011	180	50	30 (40)	4	A-B	
		C				
A080 012	140	4	30 (40)	4	C	
A080 013	140	5	30 (40)	4	C	
A080 014	140	5.5	30 (40)	4	C	
A080 015	140	6	30 (40)	4	C	
A080 016	140	7.5	30 (40)	4	C	
A080 017	140	10	30 (40)	4	C	
A080 018	140	12.5	30 (40)	4	C	
A080 019	140	15	30 (40)	4	C	
A080 020	140	20	30 (40)	4	C	

**When ordering indicate type A-B-C*
**The maximum bore size is shown between the brackets*

Machine	**Macchina**	**Maschine**
Application	**Applicazioni**	**Einsatzbereich**
Advantage	**Vantaggi**	**Vorteile**

BANER TOOLS

Panel raising brazed cutter-head

Fresa per piattapanda saldobrasata

Gelöteter Abplatt-Messerköpfen

A081

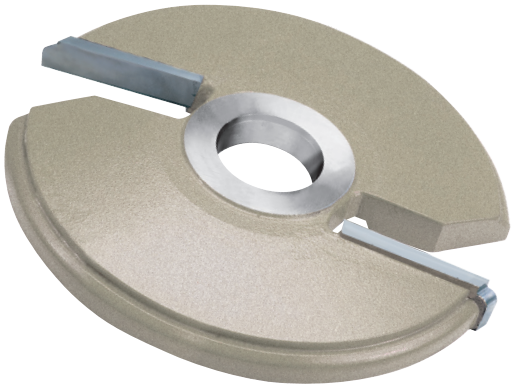

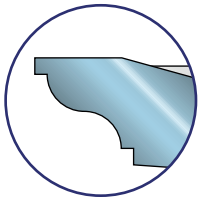

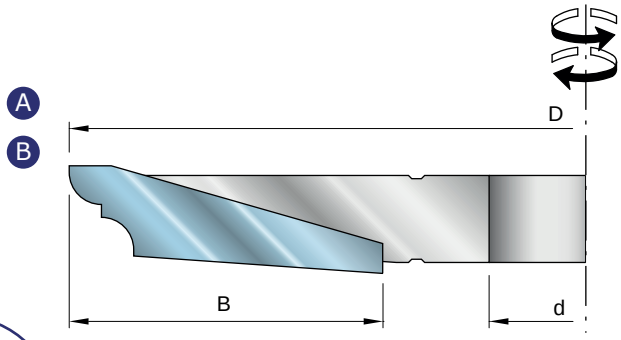

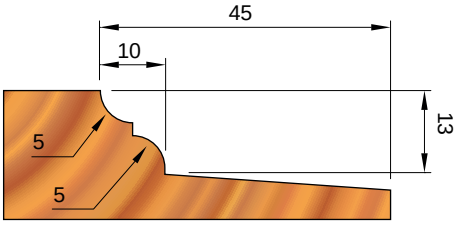

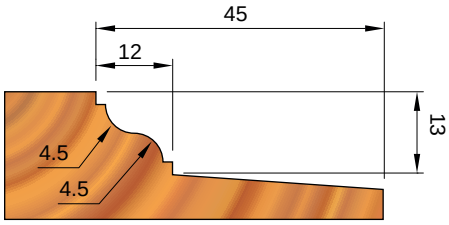

Tool tested according to the norm EN 847-1

Code	D (mm)	B (mm)	d (mm)	Z	Rotation	Ref.	€
A081 001	160	50	30 (40)	2		A	
A081 002	160	50	30 (40)	2		B	
A081 003	160	50	30 (40)	2		C	
A081 004	160	50	30 (40)	2		D	

The maximum bore size is shown between the brackets

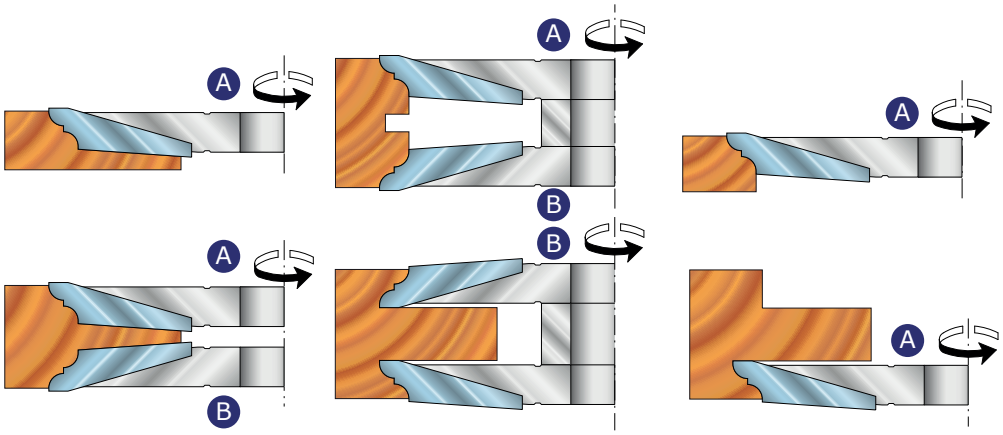

Machine	Macchina	Maschine
Application	Applicazioni	Einsatzbereich
Advantages	Vantaggi	Vorteile

BANER TOOLS

BANER
TOOLS

Albania

Autostrada Tirane-Durres Km 14
(Karburanti "ELDA")

Phone: +355 692173112

e-mail: info@banertools.com

Italy

Via Brasile 13, 63066,
Grottammare (AP)

Phone: +39 3473027291

e-mail: info@banertools.com

The Netherlands

Rijkebuurtstraat 15, 4611 GZ,
Bergen op Zoom

Phone: +31 164315939

e-mail: info@banertools.com

BANER
TOOLS

info@banertools.com | www.banertools.com